Packaging - Processing
Bid on Equipment
1-847-683-7720
www.bid-on-equipment.com

Thermo Scientific Mercury Freedom System™

Mercury monitoring that's easy to live with

Part of Thermo Fisher Scientific

Thermo SCIENTIFIC

Simplicity of design is the key

Meeting 40 CFR Part 75 is the basic criterion for selecting a mercury monitoring solution. The Thermo Scientific Mercury Freedom System is an exceptional example of how to best meet that criterion.

The next step is finding the system that's the easiest to live with. The focus in shaping the Mercury Freedom System has been simplicity of design. That simplicity results in maximum ease of use, lower installation and operating costs, high reliability, ease of maintenance and lower space requirements. All the characteristics that make a monitoring system the most desirable to own – on a daily, monthly and yearly basis.

The new Thermo Scientific Mercury Freedom System is a complete, integrated solution – a probe and internal converter at the stack, plus control, analysis and calibration modules fitting a standard EIA rack. Data outputs are compatible with your existing plant control and data system.

A smaller, neater package – with only four components.

At the stack:

- A probe incorporating an innovative dry converter and $HgCl_2$ generator

In the shelter:

Three instruments fitting into a standard EIA rack:

- A probe controller
- A mercury analyzer
- An elemental calibrator

Less space in the shelter

Simpler design means less space is needed than with wet conversion systems which require water lines installed and room for maintenance-intensive peristaltic pumps. And, no argon carrier gas is required, another saving on space – and expenses.

Ease of use

The *i*Series user interface is easier to use than ever. Fast, intuitive navigation and simple, menu-driven programming make the software easy to learn – even for inexperienced operators. And because our *i*Series instruments have a common look and feel, if you know another one, you'll know the Mercury Freedom interface.

Lower operating costs

In addition to avoiding extra components, and the potential costs of disposing of mercury and caustic contaminated waste water, the Mercury Freedom System's unique direct measurement atomic fluorescence design eliminates the need for expensive gold amalgamation – a technology also subject to acid gas poisoning. In addition, commonality of components with other *i*Series instruments means lower spare parts inventory costs.

Ease of maintenance

The Mercury Freedom System is built on the *i*Series platform which features optimized component layouts, easy-access, slide-apart housings and a similar design across the series with many common components . If your service personnel already handle *i*Series analyzers, they'll be up to speed in no time. In any case, the *i*Series platform is probably the fastest, easiest family of monitoring equipment to maintain. Remote diagnostics reduce travel time when maintenance is needed.

High reliability

The tradition of reliability continues in these instruments. With fewer major components and an elegant simplicity of design within those components, there is simply less to go wrong than in more complex alternative systems.

DAS compatibility

Maximum flexibility in communication protocols enables easy interface with new or pre-existing DAS. An Ethernet port, RS-232 connectors and 4-20 mA analog outputs are built right into the analyzer. And, major DAS providers already have protocols for interfacing with *i*Series instruments.

High sensitivity

The standard system offers an MDL of 0.04 $\mu g/m^3$. Low emitters with total stack Hg below 1.0 $\mu g/m^3$, can add the MaxSense™ option which reduces system MDL to 0.008 $\mu g/m^3$ – a 5x increase in sensitivity.

Integration services

A step-by-step integration process leads from proposal through drawings, checklist, factory acceptance, training, installation and startup. Coming to us for integration taps into our expertise as the system manufacturer throughout the process, and delivers the time and cost efficiencies of using one supplier.

DEMANDS OF THE CLEAN AIR MERCURY RULE

By establishing standards of performance for new and existing coal-fired electric utility steam generating units under Section III of the Clean Air Act and finalizing performance specifications for continuous monitoring of Total Vapor Phase Mercury Continuous Emissions, Monitoring Systems in Stationary Sources, the U.S. EPA is prepared to regulate Hg emissions in a similar manner to that of NOx and SO_2 emissions under the Acid Rain Program.

Since the introduction of the 1990 Clean Air Act Amendments, we have been supplying probes, analyzers and systems to the utility industry for compliance emissions monitoring under 40 CFR Part 75. With an installed base of approximately 71% of the SO_2 analyzers and 64% of the NOx analyzers reporting into the U.S. EPA Part 75 Electronic Data Report (EDR) files, we have demonstrated a clear understanding of the monitoring needs of the utility industry, the complexities associated with a variety of flue gas matrices and the critical importance of system reliability. This knowledge base and experience makes us an ideal partner for addressing the monitoring demands of the Clean Air Mercury Rule.

Packaging - Processing
Bid on Equipment
1-847-683-7720
www.bid-on-equipment.com

Thermo Scientific Model 80*i* Mercury Analyzer

Simplicity makes it easy

Advanced cold vapor atomic fluorescence analysis provides continuous sample measurement, with no additional gases or pretreatment required – and virtually no interference from SO_2. Detection limits down to 1 ng/m^3 allow high sample dilution (100:1) reducing moisture, heat and interfering pollutants.

Easier to interface
Expanded I/O functionality and new connectivity capabilities make it easy to integrate *i*Series instruments into just about any plant operation and data flow. They support MODBUS and TCP/IP protocols and the iPort custom remote communications software package. The new line of instruments is also backward-compatible with our earlier generation analyzers, and fits right into your current product lineup.

Digital output card –
Includes 10 relays for alarms and status outputs. Optional I/O expansion card provides an additional six 0-20/4-20 mA analog outputs, and eight 0-10V analog channels that accept input from external sensors.

Efficient remote access –
Now you can check system status from the road or from home — from anywhere there's a connection to the Internet.

New flash memory –
Provides increased storage and user downloadable software.

Ethernet port –
Built-in Ethernet connectivity enables easy networking with existing control and data management systems, as well as convenient remote access.

Enhanced I/O functionality –
16 digital inputs, 10 digital outputs, 6 analog outputs, and 8 analog inputs allow for collection of data from external sensors.

Two RS-232/485 serial connectors –
Software-programmable for RS-232 or RS-485 with software-selectable baud rate, single port can be daisy-chained for system operation.

Easier to maintain
The *i*Series has been re-engineered with on-site serviceability in mind. All components have been made more accessible for quick maintenance or change-out, by simply removing the top, sliding apart the interior sections and folding down the interior divider panel as shown below.

From one gas to another, the analyzers share a similar design and many common components, making it easier to train your service people and realizing savings on spare parts inventory, as well.

Experienced technical support is readily available for service back-up, or to help talk through a problem.

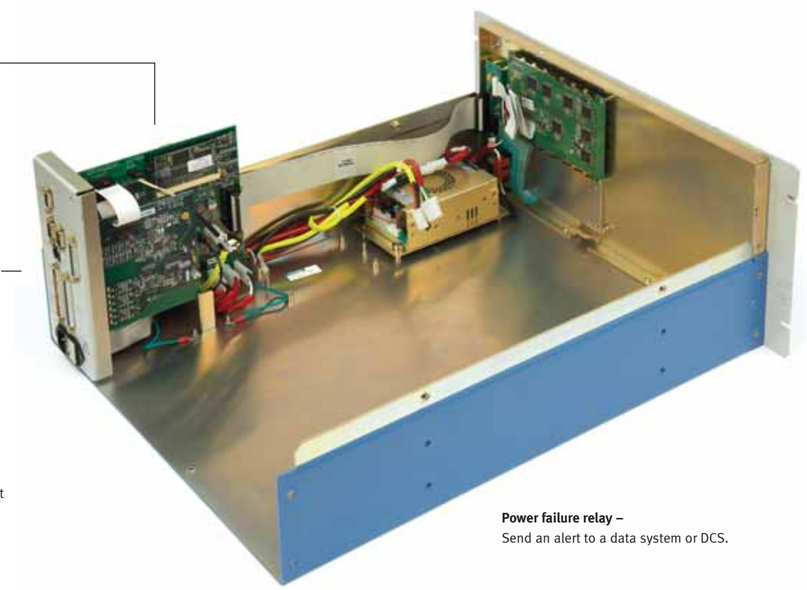

Power failure relay –
Send an alert to a data system or DCS.

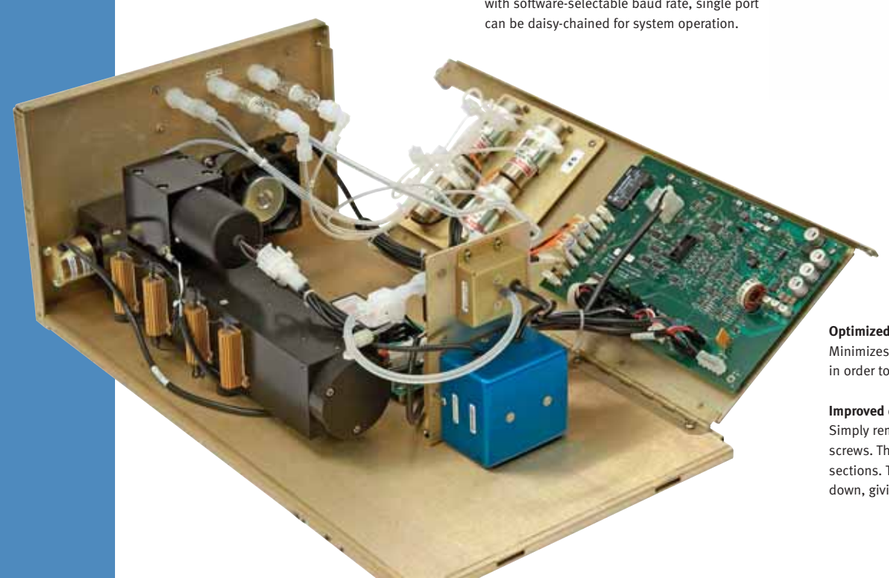

Optimized component layout –
Minimizes the need to remove other components in order to get at the one you're servicing.

Improved design for easy service access –
Simply remove the top with the captive thumb-screws. The unit then slides apart into two sections. Then, the interior dividing panel folds down, giving easy access to all components.

Easier to use
The redesigned *i*Series interface is easier to use. Fast, intuitive navigation and simple, menu-driven programming, make the software easy to learn — for operators with all levels of experience.

Programmable soft-keys allow instant access to frequent functions. A primary screen displays all critical information and a menu screen shows all key parameters plus retains primary screen data.

We've also designed all the iSeries analyzers to have a common look and feel. Operators who have used one can easily use any of the other models.

Programmable soft-keys. You can easily program soft-keys which allow you to jump directly to frequently accessed functions, menus or screens.

Menu screen. A single click puts you in menu mode, with all key setup parameters instantly available, while primary screen data remains visible.

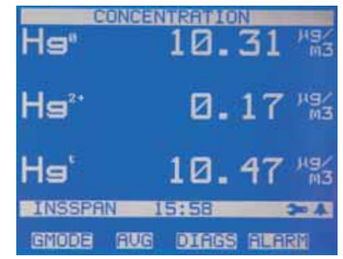

Primary screen. All critical information appears on the main monitoring screen, including sample concentrations, instrument mode and alarm status.

Specifications

Elemental Hg measurement range	0-50 µg/m^3 (effective range before dilution)
Zero noise	1 ng/m^3 (300 second average)
Lower detectable limit	1 ng/m^3 (300 second average)
Zero drift (24 hour)	2 ng/m^3 90 seconds (30 second average)
Response time	90 seconds (60 second average time)
Linearity	+/- 1% full scale
Sample flow rate	0.5 slpm
Interference rejection (SO_2)	8.4 x 10^8 : 1 SO_2 interference below LDL
Interference rejection (NOx)	4.2 x 10^9 : 1 NO interference below LDL
Operating temperature	5 - 40° C
Power requirements	100 vac, 115 vac, 220-240 vac +/-10% @ 275W
Size and weight	16.75" W x 8.62" H x 23" D, 49 lbs. 425 mm W x 219 mm H x 584 mm D, 22.2 kg
Outputs	selectable voltage, RS232/RS485, TCP/IP, 10 status relays, and power fail indication. 0-20 or 4-20 mA isolated current output
Inputs	16 digital inputs, 8 0-10 vdc analog inputs

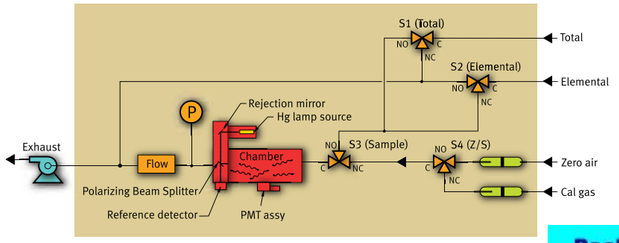

Packaging - Processing
Bid on Equipment
1-847-683-7720
www.bid-on-equipment.com

Thermo Scientific Model 81*i* Hg Calibrator

Calibration made simple

The Model 81*i* utilizes a vapor generator to perform standard calibration upstream of the inertial filter and dynamic spiking into the extraction probe. A wide calibration range of 0.3 µg/m^3 to 50 µg/m^3 lets you directly calibrate the analyzer at post-dilution concentrations.

This instrument is ideally suited for daily zero/span checks and routine converter efficiency and linearity testing.

Integrated diagnostics perform calibrations directly to the analyzer and the critical orifice with no laptop required.

The internal mercury source will last the life of the instrument.

Peltier cooler vapor pressure control and mass flow control regulate mercury output for maximum accuracy.

Like the Model 80*i* analyzer, this calibrator is built on an *i*Series platform and incorporates the same intuitive interface, featuring programmable soft-keys to instantly access frequent functions, a primary screen showing all critical information and a menu screen showing all key parameters plus retaining primary screen data.

Specifications

Gas Dilution	
Accuracy of each mass flow measurement	+2% of reading or 1% of full scale, whichever is less - 20 to 100% full scale
Linearity of mass flow measurement	0.5% of full scale
Repeatability of mass flow measurement	+2% of reading or 1% of full scale, whichever is less - 20 to 100% full scale

Mass Flow Controller	
Zero Air Flow Controller	20 slpm
Span Gas Flow Controller	50 sccm
Hg source control	0° - 15° C
Hg concentration standard output	3 - 50 µg/dscm
Linearity	+/- 2 % full scale
Operating temperature	5° - 40° C
Power requirements	250 watts
Size and weight	16.75" W x 8.62" H x 23" D, 48 lbs. 425 mm W x 219 mm H x 584 mm D, 21.8 kg
Outputs	selectable voltage, RS232/RS485, TCP/IP, 10 status relays, and power fail indication (standard). 0-20 or 4-20 mA isolated current output (optional)
Inputs	16 Digital Inputs (standard), 8 0-10 vac, Analog Inputs (optional)

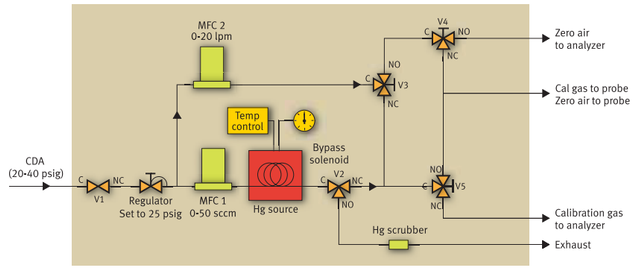

Thermo Scientific Model 82*i* Probe Controller

Microprocessor driven automation

The controller connects by an umbilical to the stack probe and mercury converter, and automates probe calibration and dynamic spiking as well as confirming autodilution.

In addition, it monitors probe temperature, measures flow rates and pressure in the sampling loop, monitors and regulates pressure using electronic transducers and regulators and enables automated stinger and filter blowback.

The Model 82*i* also provides power to the probe eliminating the need for power at the stack.

Fiber Optic Communications Capabilities

We also offer a fiber optic option for the Mercury Freedom System with the development of the 82x. The 82x is mounted at the stack and provides control of the probe via fiber optic communications to the rack. The fiber optic option minimizes copper wire connections to the stack thereby providing a measure of protection from electrical surges. The 82x is yet another example of our dedication to fulfilling the needs of the power generation industry.

Specifications

Operating temperature	5° - 40°C
Power requirements	120 vac, 15 amp circuit 220 vac, one 15 amp circuit 220 vac, one 30 amp circuit for ‹200' line 220 vac, two 30 amp circuits for ›200' line
Size and weight	16.75" (W) x 8.62" (H) x 23" (D), 48lbs. 425 mm (W) x 219 mm (H) x 584 mm (D), 21.8 kg
Air requirements	10 lpm zero air 4 CFM dry air

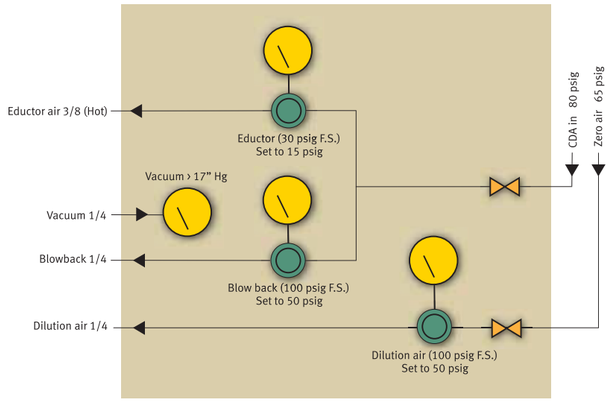

Packaging - Processing
Bid on Equipment
1-847-683-7720
www.bid-on-equipment.com

Thermo Scientific Model 83*i* GC Probe/Converter

Simplicity of design for accuracy, low maintenance and ease of service

The Model 83*i* GC consists of a dilution probe and a proprietary dry converter/scrubber housed in an insulated enclosure.

A probe designed for coal-fired plants
The sampling probe is specifically designed for monitoring mercury emissions from coal-fired power plants and waste incinerators. In wet stack applications a low-flow non-inertial filter is used to reduce deposits. Automated blowback clears the filter for trouble-free continuous operation. All components exposed to sample gas are glass-coated to prevent loss or recombination of mercury vapor.

To prevent sample condensation, all key components are further enclosed in a heated aluminum cabinet.

Dilution and calibration take place within the probe. The dilution based system reports Hg concentrations on a wet basis. No costly flue gas moisture analyzers are needed to correct dry-basis concentrations back to wet-basis for calculating Hg mass emissions.

Calibration gas can be introduced at the inertial filter, the critical orifice, or directly to the analyzer.

A new kind of converter
The proprietary dry converter/scrubber requires no wet chemistry or water supply. The unique high-efficiency technology converts oxidized forms of mercury to elemental mercury technology and meets the provisions of 40CFR Parts 60 and 75 system integrity test criteria, while measuring elemental, ionic, and total mercury.

At the stack for accuracy
Conversion at the stack makes for greater accuracy and allows future potential for an in-stack integrity test. The combination of dilution, scrubbing and vacuum "freezes" the chemistry to prevent mercury loss or recombination while in the Teflon umbilical.

The simplicity of dry conversion
There are no water lines to install to remove acid gases and no hazardous waste water, containing caustics and mercury.

Lighter and easier to maintain
Weighing only 75 pounds (including heated stinger), the probe has been designed for easier maintenance and service. The latched cover removes easily, enabling interior components to be serviced or removed in minutes.

83*i* SI and MI
We continue to offer the Standard Inertial Probe and the Modified Inertial Filter Probe for wet and dry stacks as alternatives to the 83*i* GC.

Specifications

Size and weight	12" (L) x 12" (W) x 18" (H), 75 lbs. (including heated stinger)
Materials – Main enclosure	304 stainless steel
Glass coated inertial filter	316L stainless steel
Dilution sampler	316L stainless steel, glass coated All wetted parts are made of 316L stainless steel
Installation	The probe mounts via a 2" ANSI flange to the mantle assembly which as a 4" ANSI flange. This 4" flange is then mounted to the sample port. The sample inlet is a 1/2" tube.
Power requirements	All power supplied by the Model 82*i* Mercury Probe Controller
Thermocouple	Type K
Flow rate	5-10 LPM
Flow rate (sample)	250 sccm
Dilution ratios	Nominal from 25:1 to 100:1

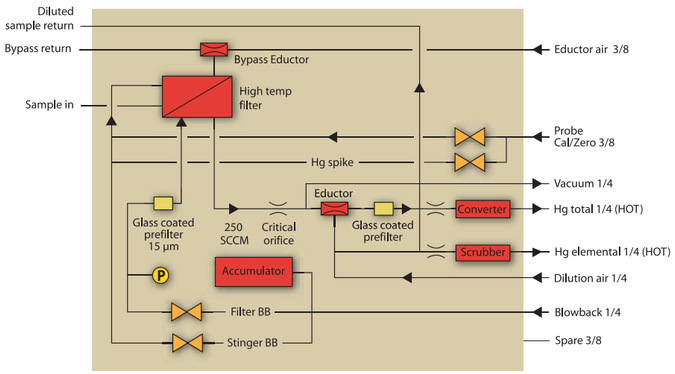

Thermo Scientific Model 81*i* MCG Mercuric Chloride Generator

An answer to the weekly integrity test

The Model 81*i* MCG provides a much needed solution to the demand for a weekly system integrity test. A standard feature of new systems and a simple retrofit for installed units, the Model 81*i* MCG is a fully integrated part of the probe, with the convenience of push button controls.

The unit combines elemental mercury with elemental chlorine gas to generate ionic mercury as mercuric chloride gas.

The benefits of dry, at-the-stack conversion are further evident here, as the test gas is produced at the probe, with no water, no pumps and no heated sample line with potential cold spots to transport the ionic test species up from the shelter.

High oxidation efficiency in the generator, a clean overall mechanism and an inherently high converter efficiency optimize consumable use and deliver a high reliability integrity test with minimal system maintenance.

Thermo Scientific Model 84*i* MaxSense™ Sensitivity Option

Increasingly powerful mercury control technologies call for increasingly sensitive monitoring to maximize emission credits. The Model 84*i* MaxSense option is ideal for installations with total stack Hg below 1.0 µg/m^3.

A compact nitrogen dilution system, fitting in the standard system dimensions and fed by the zero air is the key. It reduces system MDL from 0.04 µg/m^3 to 0.008 µg/m^3 – a 5x increase in sensitivity.

Available as an option on new systems or as a retrofit to existing models, this new option demonstrates the Mercury Freedom System's inherent flexibility to adapt to the industry's evolving needs.

Pick a partner you can rely on

With the deadline to fully implement the CAMR nationwide rapidly approaching and with mercury credits trading as high as $40,000/lb., this is not a decision to be made lightly.

We have the experience
We were there for the implementation of the 1990 Clean Air Act Amendments (CAAA) under 40 CFR Part 75 mandating monitoring of NOx and SO_2. And in the mid-90's for the NOx SIP Call regulations and the late '90s gas turbine boom. So we have the knowledge and track record of meeting customer needs for rapid ramp up and comprehensive, on-going support.

We have the capability
Our air quality monitoring operation incorporates R&D, manufacturing, general management, sales and support together in one manufacturing facility.

We have the capacity to handle even the largest orders
Last year alone our facility produced in excess of 3500 "blue boxes" and production is geared up for the increased demands of the CAMR.

We have the technical support
The Mercury Freedom System comes backed by one of the largest, most knowledgeable service and support organizations anywhere. Before the sale, after the sale, in any time zone, our highly trained and experienced customer care, service and support professionals are ready to help.

And, with thirty five-years of emissions monitoring experience from a multitude of sources we provide the industry's broadest, deepest knowledge base for you to draw on.

Packaging - Processing
Bid on Equipment
1-847-683-7720
www.bid-on-equipment.com