Packaging - Processing
Bid on Equipment
1-847-683-7720
www.bid-on-equipment.com

Product Specifications

Mercury Calibrator, Model 81i

Precision source of mercury for automated calibrations and checks

Key Features

- Performs standard calibration upstream of the inertial filter
- Capability to perform diagnostic calibrations directly to analyzer and critical orifice
- Long lasting Hg source
- Uses Peltier cooler vapor pressure control and mass flow control
- Wide concentration range for post-dilution calibration
- Ideal for periodic converter efficiency and linearity testing

The Thermo Scientific Mercury Calibrator, Model 81*i* Mercury Calibrator is one of the four major components of the Mercury Freedom System. The Model 81*i* utilizes a vapor generator that allows standard calibration and dynamic spiking into the extraction probe. A wide calibration range lets you directly calibrate the analyzer at post-dilution concentrations. The calibrator is ideally suited for daily zero/span checks and routine converter efficiency and linearity testing.

Designed to meet the provisions of 40CFR Parts 60 and 75, the Mercury Freedom System provides a complete mercury monitoring solution that reports elemental, ionic, and total mercury in exhaust stacks from both coal-fired boilers and waste incinerators.

The Model 81*i* also offers the benefits of the iSeries platform features flexible communications, increased serviceability, and an easier to use interface.

Ethernet connectivity provides efficient remote access, allowing the user to download measurement information directly from the instrument without having to be on site. Captive hardware and slide-apart modules allows easy access for service and periodic maintenance.

You can easily program short-cut keys to allow you to jump directly to frequently accessed functions, menus or screens. The larger interface screen can display up to five lines of measurement information while the primary reporting screen remains visible.

Hg Calibrator, Model 81*i*

Packaging - Processing
Bid on Equipment
1-847-683-7720
www.bid-on-equipment.com

To maintain optimal product performance, you need immediate access to experts worldwide, as well as priority status when your air quality equipment needs repair or replacement. We offer comprehensive, flexible support solutions for all phases of the product life cycle. Through predictable, fixed-cost pricing, our services help protect the return on investment and total cost of ownership of your Thermo Scientific air quality products.

Product Specifications

Gas Dilution:	
Accuracy of each mass flow measurement	+2% of reading or 1% of full scale, whichever is less - 20 to 100% full scale
Linearity of mass flow measurement	0.5% of full scale
Repeatability of mass flow measurement	+2% of reading or 1% of full scale, whichever is less - 20 to 100% full scale
Mass Flow Controller:	
Zero Air Flow Controller	20 slm
Span Gas Flow Controller	50 sccm
Hg Source Control	0^0 - 15^0 C
Hg Concentration Standard Output	3 - 50 µg/dscm
Linearity	+/- 2 % full scale
Operating Temperature	5^0 - 40^0 C
Power Requirements	250 watts
Size and Weight	16.75"(W) x 8.62"(H) x 23"(D), 48 lbs.
	425 mm (W) x 219 mm (H) x 584 mm (D), 21.8 kg
Outputs	Selectable Voltage, RS232/RS485, TCP/IP, 10 Status Relays, and Power Fail
	Indication (standard). 0-20 or 4-20 mA Isolated Current Output (optional)
Inputs	16 Digital Inputs (standard), 8 0-10 VAC, Analog Inputs (optional)

Model 81i Hg Calibrator

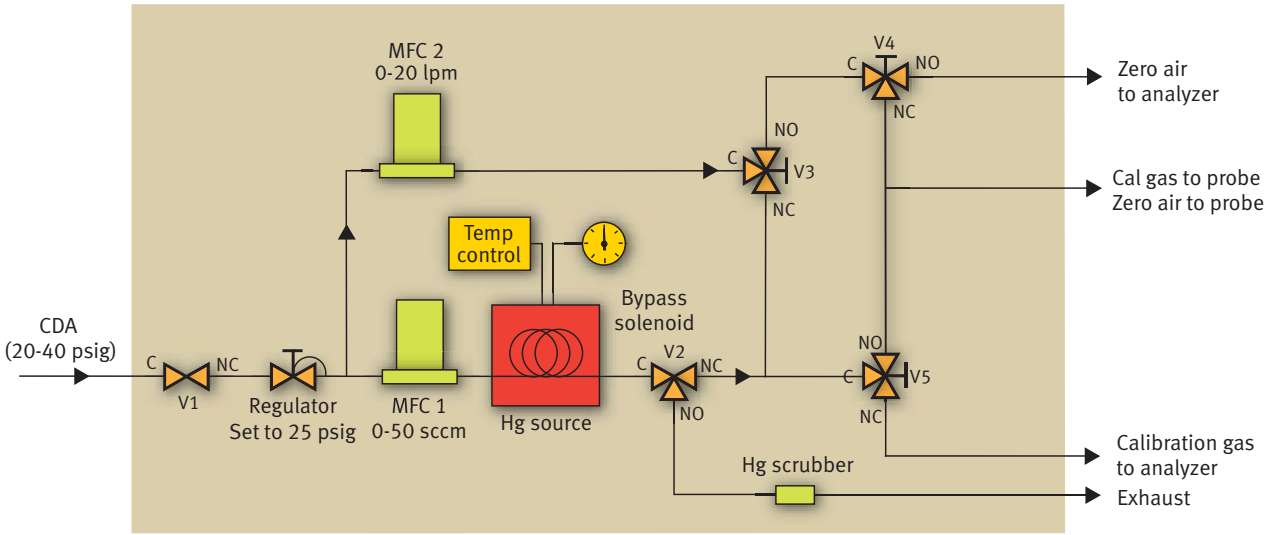

This specification sheet is for informational purposes only and is subject to change without notice. Thermo Fisher Scientific makes no warranties, expressed or implied, in this product summary.
© 2009 Thermo Fisher Scientific, Inc. All rights reserved Thermo Fisher Scientific, Inc.

This product is manufactured in a plant whose quality management system is ISO 9001 certified.

Lit_Model#AQI_01/09

Environmental
Instruments Division
Air Quality Instruments

Thermo
SCIENTIFIC