THERMAL CARE

www.thermalcare.com

Central Chillers
TS Series

This remote air-cooled central chiller (Model TSR50A) is shown with an integral stainless steel reservoir, process pump, and chiller pump. It also features a dual standby pump with a dual standby discharge manifold.

With over 40 years of process cooling experience, Thermal Care is the dependable choice for industrial process chillers.

Our TS Series is just one of several central chiller designs that have made us a leader in providing compact central chilling systems for industrial applications. TS Series central chillers are available in both water-cooled and remote condenser models.

Units come standard with easy-to-use PLC controls and are both easy to install and operate.

Available in sizes from 20 to 100 tons

Time-proven design and money-saving efficiency

Every TS Series chiller is built using energy-efficient, trouble-free scroll compressors. The stainless steel brazed plate evaporators are compact, provide higher heat transfer coefficients and protect against corrosion. These rugged chillers also feature two completely independent refrigeration circuits and are available with two or four compressors that use an environmentally friendly refrigerant.

Mechanical features

- **Scroll compressors**
- **Stainless steel evaporators**
- **Two completely independent refrigerant circuits**
- **Evaporator water supply and return manifolds**
- **Y-strainers protect evaporators from contamination**
- **Water-cooled units include:**
  Supply and return condenser manifolds.
  Generously sized, cleanable, shell-and-tube condensers for industrial environments.
  Regulating valves for condenser water that maintain constant refrigerant head pressures.

Electrical features

- **NEMA-4 enclosure**
- **Control transformer that provides 115/1/60 control voltage**
- **Compressor starters are mounted in control panel and wired to motors**
- **Pump starters are mounted in control panel and wired to motors when chiller includes optional stainless steel pump tank**
- **Single-point main power block for simple wiring connection**
- **Alarm horn and silence switch**

Packaging - Processing
Bid on Equipment
1-847-683-7720
www.bid-on-equipment.com

Easy-to-use Operator Control System (OCS)

The TS Series standard controller is an OCS PLC with integrated HMI (Human Machine Interface). The interface is designed using clear text English language menus.

Powerful integrated control for TS Series central chillers

Every TS Series chiller comes standard with a compact OCS that combines PLC control with an easy-to-operate user interface. Included is an integrated Intel-based microprocessor controller, operator interface and solid state input/output relays. A PLC with touch screen display is available as an option.

Features

- **Two line, 20 character alphanumeric display**
- **Ten menu selector keys**
- **Real-time clock**
- **°F or °C temperature display scales**
- **Set point temperature display**
- **Process water supply and return temperatures**
- **Compressor automatic lead/lag and run times**
- **Password protected digital set point and temperature deviation alarm adjustment**
- **Circuit alarms include:**
  Low flow
  Freezestat
  High refrigerant pressure
  Compressor low pressure
- **Water temperature readouts include:**
  Process water supply
  Process water return
  Set point
- **System alarms include:**
  Compressor fault
  Pump fault
  Chiller tank low level
  Supply temperature high
  Process return sensor fault
  Process supply sensor fault
  E-Stop pressed
- **High and low temperature alarms**
- **Alarm history screen**
- **User selectable lead/lag of refrigerant circuits**
- **Compressor anti-cycle timers**
- **Easy front panel alarm reset button**

Every Thermal Care central chiller comes with factory authorized start-up service. Our TS Series central chillers come standard with the industry's best warranties.

- **One full year on parts**
- **One full year on labor**
- **Three full years on PLC controller and interface.**

Count on Thermal Care to be your one source for a complete line of dependable process cooling equipment. From system design through equipment start-up, to exceptional service and repair parts – Thermal Care does it all.

A remote condenser, as shown here, is used when a cooling tower is not available.

For additional specifications and system information, please visit us on the web at www.thermalcare.com

THERMAL CARE

7720 N. Lehigh Avenue
Niles, IL 60714-3491

Toll-free 888-828-7387
Telephone 847-966-2260
Fax 847-966-9358
www.thermalcare.com

Manufacturer reserves the right to change specifications and design without notice or obligation. Thermal Care, Inc. is a registered trademark of MFRI, Inc.
Printed in USA. Form 3-213.1

Packaging - Processing
Bid on Equipment
1-847-683-7720
www.bid-on-equipment.com

TS Series
Design and Component Specifications
20 to 100 Tons

TSR40A With Pump/Reservoir Option

General
The TS Series central chillers are designed for indoor use in industrial manufacturing locations. The chillers are produced in our ISO 9001:2000 certified facility. Water-cooled units ship with a full refrigerant charge. Units with a remote air-cooled condenser ship with a nitrogen charge. All units are built on a rugged industrial duty frame and are finished with air-dry enamel paint.

Mechanical Features
- Energy efficient and reliable scroll compressor(s)
- Stainless steel copper brazed plate evaporators provide corrosion protection, compact size and higher heat transfer coefficients
- Two completely independent refrigerant circuits
- Evaporator water supply and return manifolds
- (Water-Cooled Units) Condenser water supply and return manifolds
- (Water-Cooled Units) Generously sized cleanable shell-and-tube water-cooled condenser for industrial environments
- (Remote Condenser Units) Modular design with divided fan sections to prevent 'wind-milling' during fan cycling. Includes galvanized steel fan sections and coil baffles, copper tube/aluminum fin coils tested to 400 PSIG, direct drive multi-blade propeller fans with venture orifices to optimize efficiency, and a nitrogen holding charge.
- (Water-Cooled Units) Condenser water regulating valves to maintain constant refrigerant head pressures
- Refrigerant TXV, filter/drier, and sight glasses
- Freezestat safety switch with solid state sensors
- Encapsulated high and low refrigerant pressure safeties
- Fail safe flow switches interlocked with compressors
- Y-strainer for each evaporator to protect evaporators from contamination
- Electronic hot gas bypass for capacity control (two compressor units)
- Four-step compressor staging for capacity control (four compressor units)
- (Water-Cooled Units) Factory tested under full load conditions prior to shipment

Electrical Features
- NEMA-4 electrical enclosure
- Control transformer to provide 115V/1/60 control voltage
- Compressor starters (and pump starters if pump tank option is purchased) mounted in control panel and wired to motors
- Single-point main power block for simple wiring connection
- Alarm horn and silence switch

PLC Features
- Operator Control Station PLC (integrated Intel based microprocessor controller, operator interface, solid state input/output relays)
- Two line, 20 character alphanumeric display
- Digital set point and temperature deviation alarm adjustment with password protection
- Digital display of process water supply and return temperatures
- Alarm history screen
- User selectable lead/lag of refrigerant circuits
- Compressor anti-cycle timers
- Compressor running hours
- Mechanical safety interlocks for each circuit including low flow, high refrigerant pressure, low refrigerant pressure, freezestat, compressor fault and pump fault (pump fault only available on units with the optional pump tank)
- System faults for high and low temperature deviation alarms and probe fault alarm
- Display temperatures easily switched from °F to °C from the front panel
- Easy front panel alarm reset button

Warranty
- 12 months parts and labor

Packaging - Processing
Bid on Equipment
1-847-683-7720
www.bid-on-equipment.com

Packaging - Processing
Bid on Equipment
1-847-683-7720
www.bid-on-equipment.com

TSW20A & TSW30A Water-Cooled Chillers

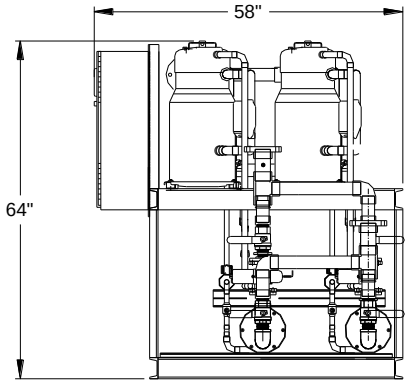

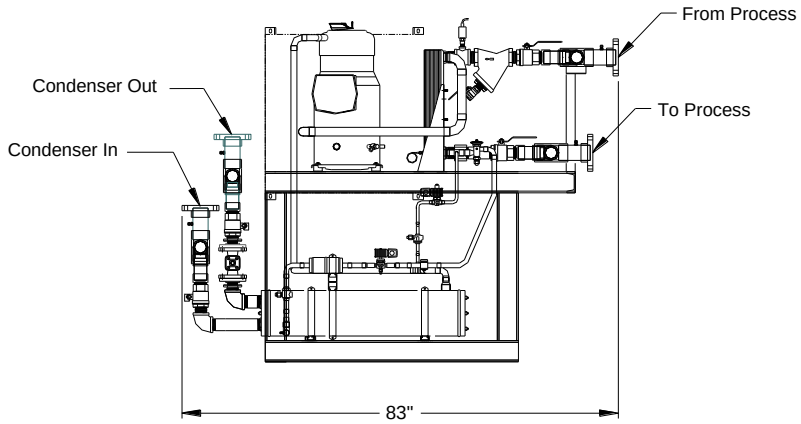

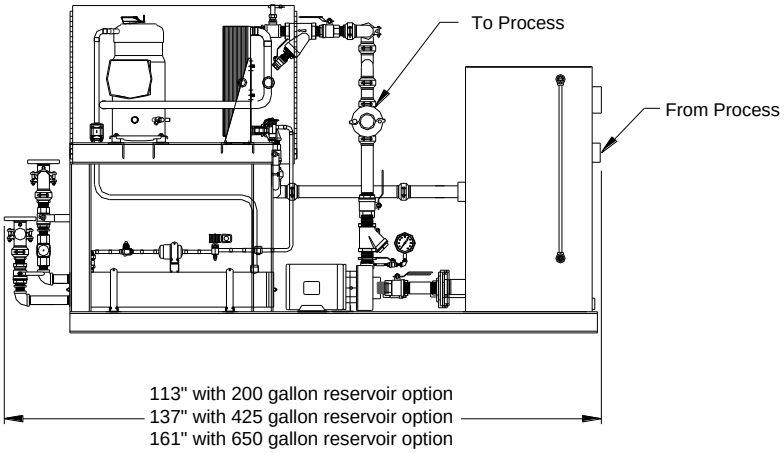

Model	TSW20A	TSW30A
Cooling Capacity (Tons)[1]	21	32
Set Point Range (°F)	20 – 80	20 – 80
Number of Compressors	2	2
Refrigerant Type	HFC-407C	HFC-407C
Condenser Water Flow Requirement (GPM)	63	96
To & From Process Manifold Connections (for units designed for standard flow to process, 2.4 GPM/ton)	2”	2 1/2”
To & From Process Manifold Connections (for units designed for double flow to process, 4.8 GPM/ton)	2”	3”
Condenser Manifold In & Out Connections	2”	2 1/2”
Unit MCA @ 460/3/60 (chiller only)[2]	43	64
Unit MCA @ 460/3/60 (chiller & standard coolant flow pumps)[2]	53	78
Unit MCA @ 460/3/60 (chiller & double coolant flow pumps)[2]	61	81
Shipping Weight, Chiller (Lbs.)	1,600	2,000
Shipping Weight, Chiller With 200 Gallon Tank (Lbs.)[3]	3,100	3,500
Shipping Weight, Chiller With 425 Gallon Tank (Lbs.)[3]	4,100	4,500
Shipping Weight, Chiller With 650 Gallon Tank (Lbs.)[3]	4,600	5,000

[1]Cooling capacity based on 12,000 BTU/Hr/ton with 50°F leaving coolant and 85°F condenser water.
[2]MCA (Minimum Circuit Ampacity) is 125% of the largest compressor RLA plus 100% of any remaining compressor RLAs (and all pump FLAs if pump tank option is purchased) plus control circuit transformer. If a dual standby pump is ordered the MCA will be higher.
[2]Shipping weight includes weight of double flow pump set and dual standby pump options.

Packaging - Processing
Bid on Equipment
1-847-683-7720
www.bid-on-equipment.com

TSW40A - TSW100A Water-Cooled Chillers

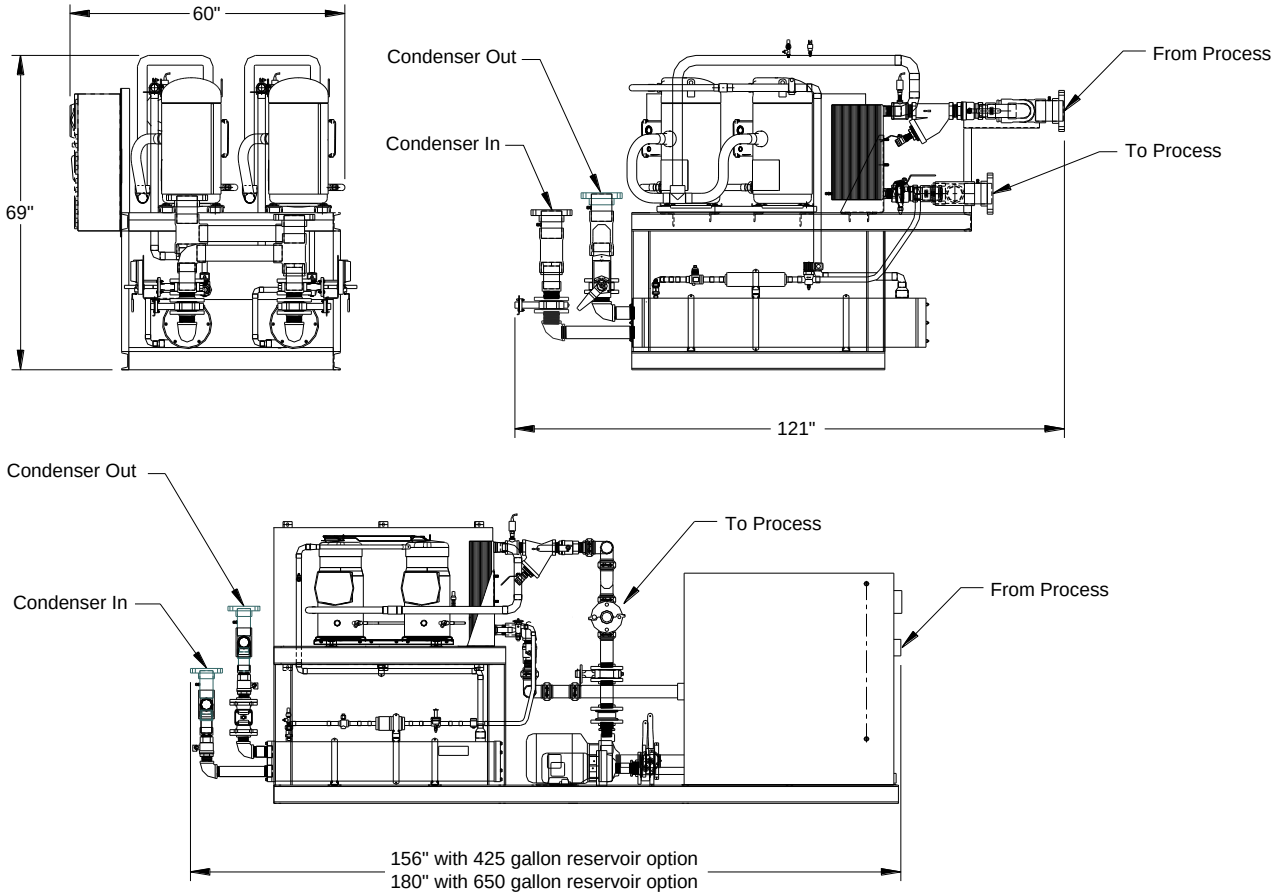

Model	TSW40A	TSW50A	TSW60A	TSW80A	TSW100A
Cooling Capacity (Tons)[1]	42	52	63	82	100
Set Point Range (°F)	20 – 80	20 – 80	20 – 80	20 – 80[2]	20 – 80[2]
Number of Compressors	4	4	4	4	4
Refrigerant Type	HFC-407C	HFC-407C	HFC-407C	HFC-407C	HFC-407C
Condenser Water Flow Requirement (GPM)	126	156	189	246	300
To & From Process Manifold Connections (for units designed for standard flow to process, 2.4 GPM/ton)	2 1/2”	3”	3”	4”	4”
To & From Process Manifold Connections (for units designed for double flow to process, 4.8 GPM/ton)	4”	4”	4”	6”	6”
Condenser Manifold In & Out Connections	3”	3”	3”	4“	4”
Unit MCA @ 460/3/60 (chiller only)[3]	80	101	120	145	185
Unit MCA @ 460/3/60 (chiller & standard coolant flow pumps)[3]	97	120	139	169	209
Unit MCA @ 460/3/60 (chiller & double coolant flow pumps)[3]	102	125	151	182	222
Shipping Weight, Chiller (Lbs.)	2,500	3,400	3,900	4,300	4,900
Shipping Weight, Chiller With 200 Gallon Tank (Lbs.)[4]	4,000	4,900	5,400	5,800	6,400
Shipping Weight, Chiller With 425 Gallon Tank (Lbs.)[4]	5,000	5,900	6,400	6,800	7,400
Shipping Weight, Chiller With 650 Gallon Tank (Lbs.)[4]	5,500	6,400	6,900	7,300	7,900

[1]Cooling capacity based on 12,000 BTU/Hr/ton with 50°F leaving coolant and 85°F condenser water.
[2]Standard set point range is 20°F to 65°F for TSW80A & TSW100A. To extend range to 20°F to 80°F the CPR valve option is required.
[3]MCA (Minimum Circuit Ampacity) is 125% of the largest compressor RLA plus 100% of all remaining compressors RLAs (and all pump FLAs if pump tank option is purchased) plus control circuit transformer. If a dual standby pump is order MCA will be higher.
[4]Shipping weight includes weight of double flow pump set and dual standby pump options.

Packaging - Processing
Bid on Equipment
1-847-683-7720
www.bid-on-equipment.com

TSR20A & TSR30A Remote Air-Cooled Condenser Chillers

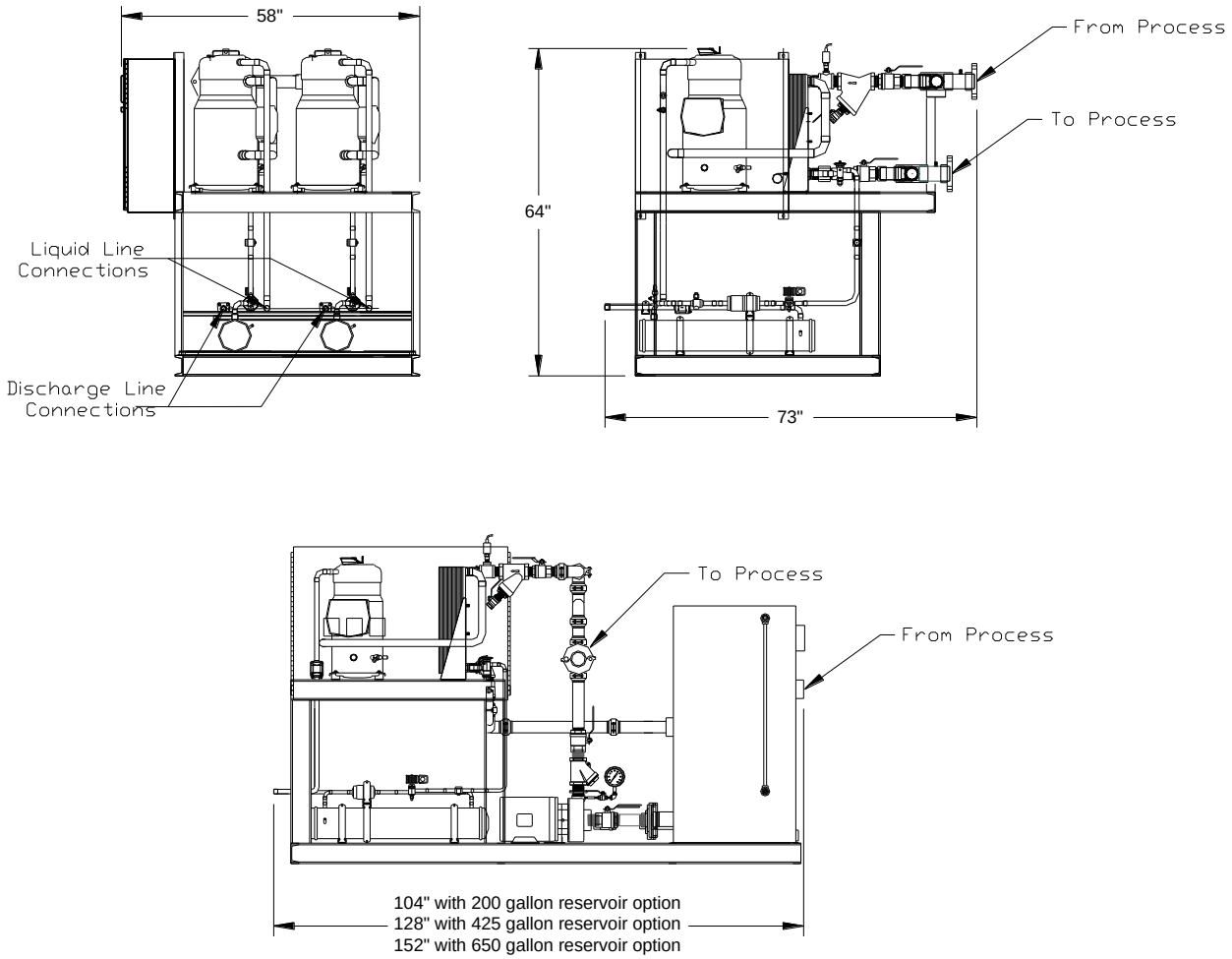

Model	TSR20A	TSR30A
Cooling Capacity (Tons)[1]	20	30
Set Point Range (°F)	20 – 80	20 - 80
Number of Compressors	2	2
Refrigerant Type	HFC-407C	HFC-407C
To & From Process Manifold Connections (for units designed for standard flow to process, 2.4 GPM/ton)	2”	2 1/2”
To & From Process Manifold Connections (for units designed for double flow to process, 4.8 GPM/ton)	2”	3”
Liquid Line Connection Size (inch)	5/8	7/8
Discharge Line Connection Size (inch)	7/8	1 1/8
Unit MCA @ 460/3/60 (chiller only)[2]	43	64
Unit MCA @ 460/3/60 (chiller & standard flow pumps)[2]	53	78
Unit MCA @ 460/3/60 (chiller & double flow pumps)[2]	61	81
Shipping Weight, Chiller (Lbs.)	1,600	2,000
Shipping Weight, Chiller With 200 Gallon Tank (Lbs.)[3]	3,100	3,500
Shipping Weight, Chiller With 425 Gallon Tank (Lbs.)[3]	4,100	4,500
Shipping Weight, Chiller With 650 Gallon Tank (Lbs.)[3]	4,600	5,000

[1]Cooling capacity based on 12,000 BTU/Hr/ton with 50°F leaving coolant and 95°F condenser air.
[2]MCA (Minimum Circuit Ampacity) is 125% of the largest compressor RLA plus 100% of all remaining compressors RLAs (and all pump FLAs if pump tank option is purchased) plus control circuit transformer. If a dual standby pump is order MCA will be higher.
[2]Shipping weight includes weight of double flow pump set including dual standby pump and condenser water manifolds.

Packaging - Processing
Bid on Equipment
1-847-683-7720
www.bid-on-equipment.com

TSR40A – TSR100A Remote Air-Cooled Condenser Chillers

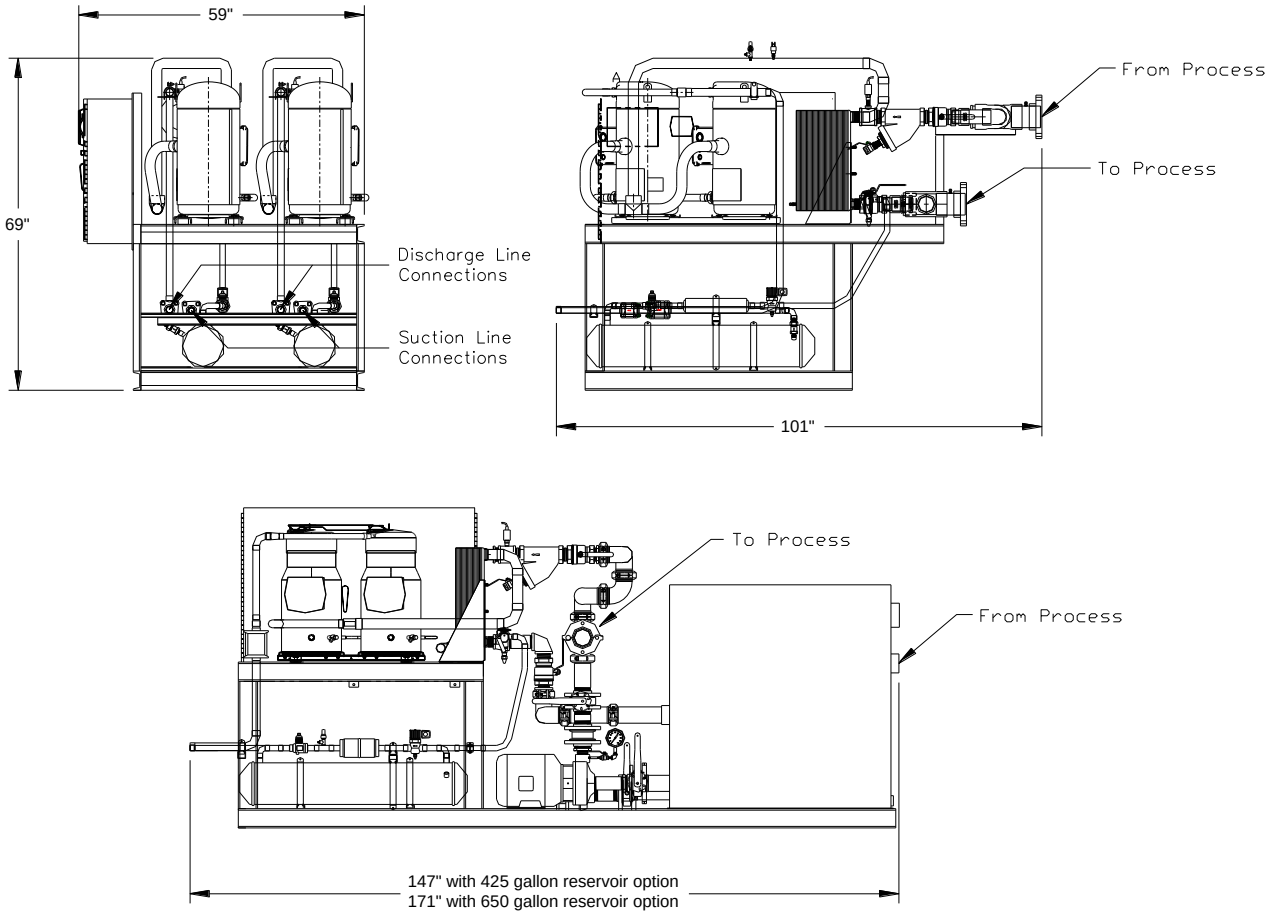

Model	TSR40A	TSR50A	TSR60A	TSR80A	TSR100A
Cooling Capacity (Tons)[1]	39	48	59	77	92
Set Point Range (°F)	20 – 80	20 – 80	20 – 80	20 – 80[2]	20 – 80[2]
Number of Compressors	4	4	4	4	4
Refrigerant Type	HFC-407C	HFC-407C	HFC-407C	HFC-407C	HFC-407C
To & From Process Manifold Connections (for units designed for standard flow to process, 2.4 GPM/ton)	2 1/2”	3”	3”	4”	4”
To & From Process Manifold Connections (for units designed for double flow to process, 4.8 GPM/ton)	4”	4”	4”	6”	6”
Liquid Line Connection Size (inch)	7/8	1 1/8	1 1/8	1 1/8	1 1/8
Discharge Line Connection Size (inch)	1 1/8	1 3/8	1 3/8	1 5/8	1 5/8
Unit MCA @ 460/3/60 (chiller only)[3]	80	101	120	145	185
Unit MCA @ 460/3/60 (chiller & standard flow pumps)[3]	97	120	139	169	209
Unit MCA @ 460/3/60 (chiller & double flow pumps)[3]	102	125	151	182	222
Shipping Weight, Chiller (Lbs.)	2,500	3,400	3,900	4,300	4,900
Shipping Weight, Chiller With 200 Gallon Tank (Lbs.)[4]	4,000	4,900	5,400	5,800	6,400
Shipping Weight, Chiller With 425 Gallon Tank (Lbs.)[4]	5,000	5,900	6,400	6,800	7,400
Shipping Weight, Chiller With 650 Gallon Tank (Lbs.)[4]	5,500	6,400	6,900	7,300	7,900

[1]Cooling capacity based on 12,000 BTU/Hr/ton with 50°F leaving coolant and 95°F condenser air.
[2]Standard set point range is 20°F to 65°F for TSR80A & TSR100A. To extend range to 20°F to 80°F the CPR valve option is required.
[3]MCA (Minimum Circuit Ampacity) is 125% of the largest compressor RLA plus 100% of all remaining compressors RLAs (and all pump FLAs if pump tank option is purchased) plus control circuit transformer. If a dual standby pump is order MCA will be higher.
[4]Shipping weight includes weight of double flow pump set including dual standby pump and condenser water manifolds.

Packaging - Processing
Bid on Equipment
1-847-683-7720
www.bid-on-equipment.com

Remote Condensers For TSR20A – TSR50A Remote Air-Cooled Chillers

LAVB-22310

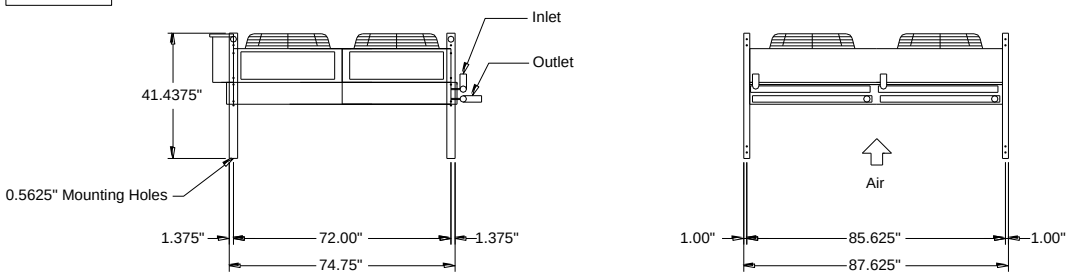

LAVB-23310
LAVB-23410

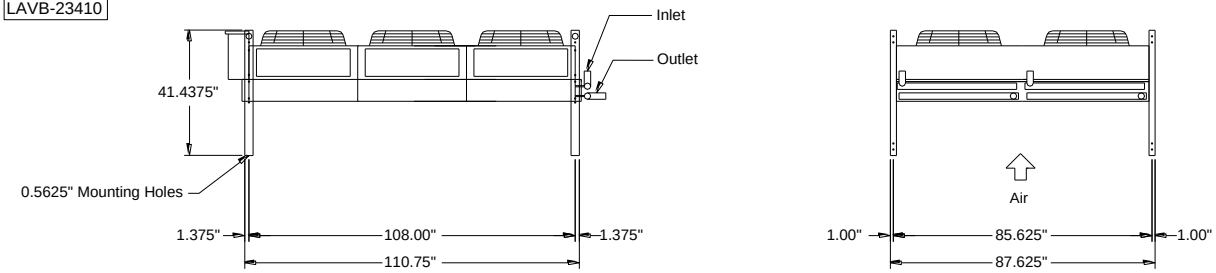

LAVB-24310

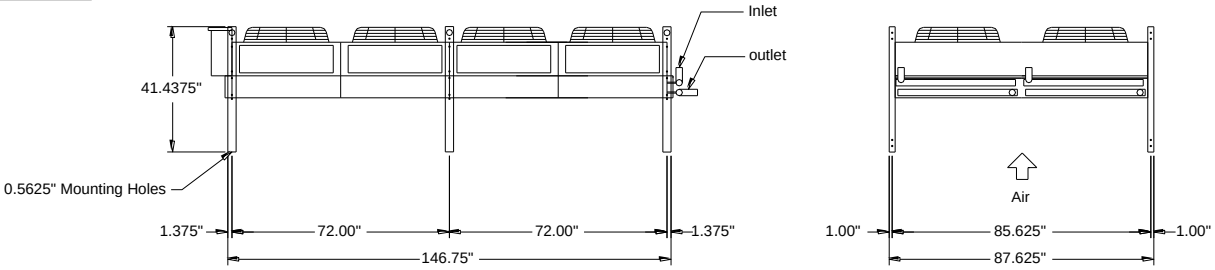

Model	Chiller Model Used With	Refrigerant Type	Condenser Air Flow CFM	Connection Size (inch)		Condenser Fans		Unit MCA @ 460/3/60[1]	Shipping Weight Lbs.
				Inlet	Outlet	Qty	HP Each		
LAVB22310	TSR20A	HFC-407C	25,600	1 5/8	1 3/8	4	½	9	865
LAVB23310	TSR30A	HFC-407C	38,400	2 1/4	1 5/8	6	½	13	1,120
LAVB23410	TSR40A	HFC-407C	36,000	2 5/8	2 1/4	6	½	13	1,225
LAVB24310	TSR50A	HFC-407C	51,200	2 5/8	2 1/4	8	½	18	1,705

[1]MCA (Minimum Circuit Ampacity) is 125% of the largest fan FLA plus 100% of all remaining fan FLAs.

Packaging - Processing
Bid on Equipment
1-847-683-7720
www.bid-on-equipment.com

Remote Condensers For TSR60A – TSR100A Remote Air-Cooled Chillers

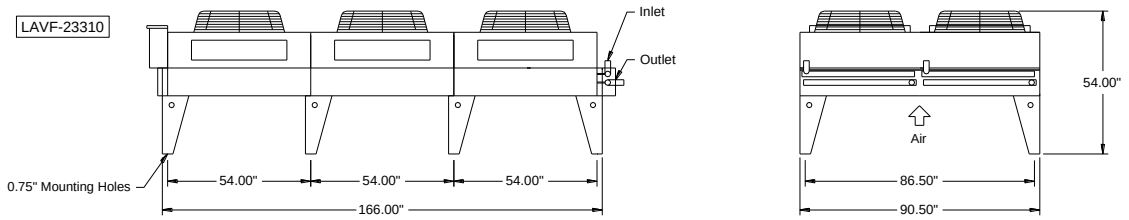

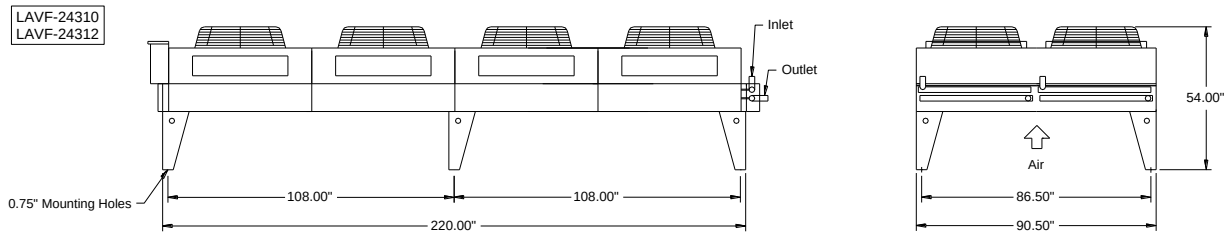

Model	Chiller Model Used With	Refrigerant Type	Condenser Air Flow CFM	Connection Size (inch)		Condenser Fans		Unit MCA @ 460/3/60[1]	Shipping Weight Lbs.
				Inlet	Outlet	Qty	HP Each		
LAVF23310	TSR60A	HFC-407C	65,045	2 5/8	2 1/4	6	½	13	2,065
LAVF24310	TSR80A	HFC-407C	86,730	2 5/8	2 5/8	8	½	18	2,655
LAVF24312	TSR100A	HFC-407C	84,690	2 5/8	2 5/8	8	½	18	2,700

[1]MCA (Minimum Circuit Ampacity) is 125% of the largest fan FLA plus 100% of all remaining fan FLAs.

Packaging - Processing
Bid on Equipment
1-847-683-7720
www.bid-on-equipment.com

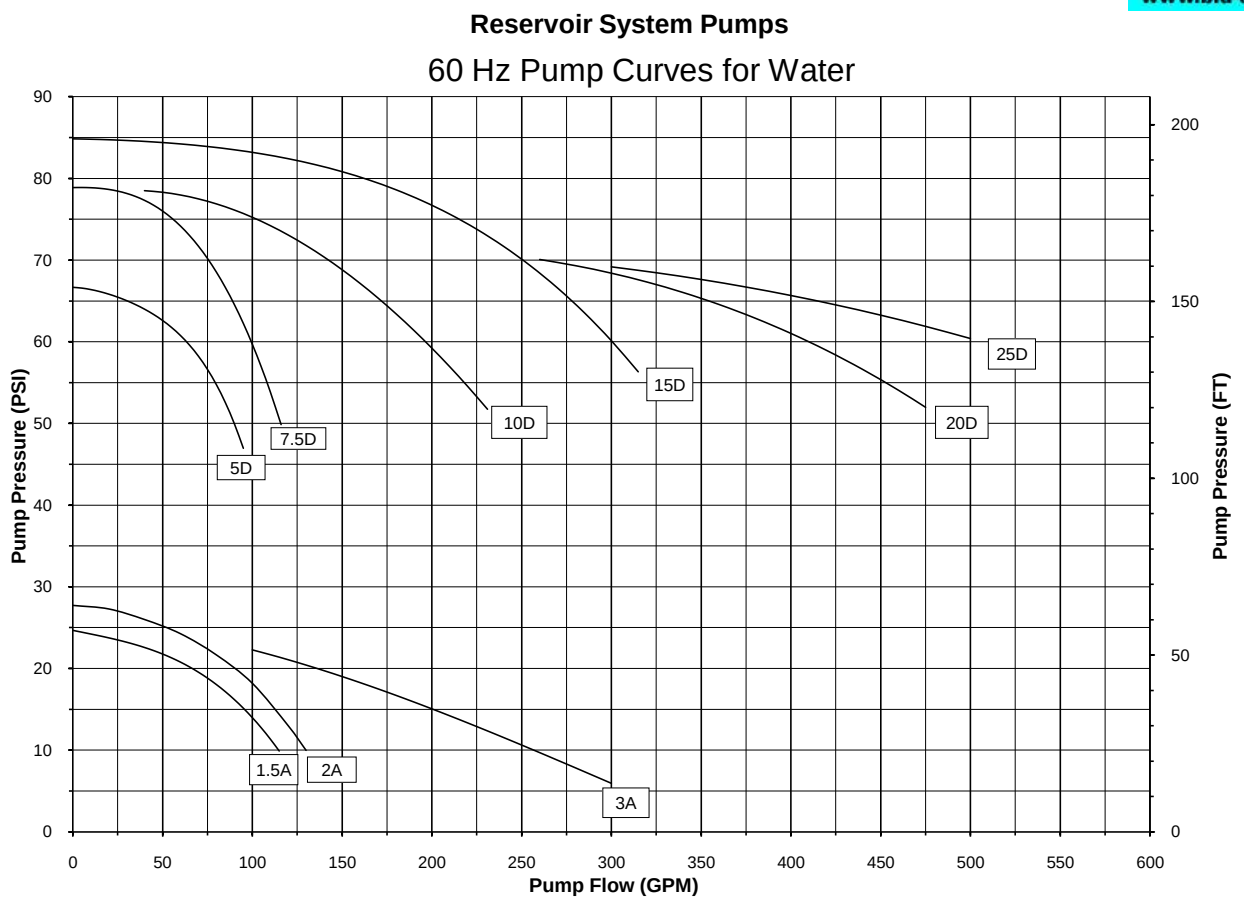

Chiller Model	Standard Flow Pump Set (2.4 GPM / ton to process)		Double Flow Pump Set (4.8 GPM / ton to process)	
	Process Pump 2.4 GPM / ton	Chiller Pump 2.4 GPM / ton	Process Pump 4.8 GPM / ton	Chiller Pump 2.4 GPM / ton
TSW20A & TSR20A	5D	1.5A	10D	1.5A
TSW30A & TSR30A	7.5D	2A	10D	2A
TSW40A & TSR40A	10D	2A	15D	2A
TSW50A & TSR50A	10D	3A	15D	3A
TSW60A & TSR60A	10D	3A	20D	3A
TSW80A & TSR80A	15D	3A	25D	3A
TSW100A & TSR100A	15D	3A	25D	3A

THERMAL CARE

7720 North Lehigh Avenue
Niles, Illinois 60714-3491
Tel: (847) 966-2260
Toll Free: (888) 828-7387
Fax: (847) 966-9358

Email: info@thermalcare.com
Website: www.thermalcare.com

Manufacturer reserves the right to change specifications or design without notice or obligation. Thermal Care is a registered trademark of MFRI, Inc.