Packaging - Processing
Bid on Equipment
1-847-683-7720
www.bid-on-equipment.com

Instruction Manual

Flexible Impeller Pump with Electromagnetic Clutch

F7B-5000, F8B-5000-VF, F8B-5000-TSS,
F9B-5600, F9B-5600-VF, F9B-5600-TSS , F95B-5000

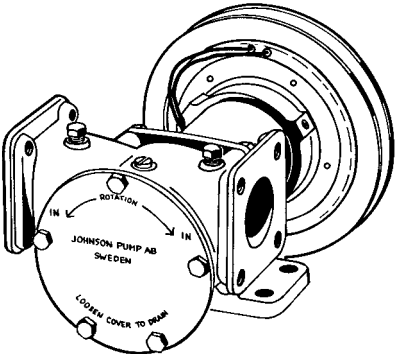

JOHNSON PUMP

IB-503/02 R03 (0611)

Packaging - Processing
Bid on Equipment
1-847-683-7720
www.bid-on-equipment.com

INDEX - INDICE

Svenska 3
English 6
Deutsch 9
Français 12
Español 15
Italiano 18

Made in Sweden

Garanti 1 år
Warranty 1 year
Garantie 1 Jahr

Garantie 1 an
Garantía 1 año
Garanzia 1 anno

Packaging - Processing
Bid on Equipment
1-847-683-7720
www.bid-on-equipment.com

Självsugande flexibel impellerpump i brons med elektromagnetisk koppling

Typiska användningsområden

- *Marint*
  Länspump, spolpump för däck och utrustning, kylpump för motorer, brandpump, sköljning av fisk.

- *Industri och jordbruk*
  Pumpen kan monteras på kraftuttag på traktorer, vägmaskiner och liknande för bevattning, spolning etc.

Teknisk beskrivning

Pumphus:	Brons
Impeller:	Neopren alt nitril (F9B/F95B endast neopren)
Axel:	Syrafast stål Axeln är lagrad i permanentsmorda dubbla kullager
Tätning:	Mekanisk tätning
Kam:	Hel alt reducerad
Anslutning:	Se "Modellspecifikation", sid 4
Koppling:	Elektromagnetisk, 2xA-spår alt 1xB-spår, Spänning: 12 V DC (4 A) 24 V DC (2 A)

Tryck- och kapacitetsdata

Se sid 26-28.

Serviceinstruktion

Se reservdelslista sid 4-5, 21-25.

Demontering

1. Lossa pumplocket och tag bort packningen.
2. Tag ur impellern med t ex två skruvmejslar.
3. Demontera kammen och tag bort tätningsmedlet på kammen och i pumphuset.
4. Tag bort slitbrickan.
5. Avlägsna låsringen (pos 16) och bricka (F7B/F95B - pos 29) som håller mekaniska tätningen. F8B/F9B har ingen bricka.
6. Smörj in axeln framför den mekaniska tätningen och tryck ner tätningen så att den släpper greppet om axeln.
7. Skruva ur skruvarna som håller pumphuset i lagerfoten på F8B/F9B/F95B (pos 25). Lossa muttern (pos 33) på F7B. Demontera pumphuset.
8. Tag ur keramikringen från pumphuset.
9. Rengör axel, pumphus, kam och lock. Avlägsna rester av tätningsmedel.

Montering

1. Fukta keramikringen med såpvatten (max 5% såpa) och montera den i pumphuset. Fett och skador får inte förekomma på tätningsytorna - det försämrar tätningsförmågan.
2. Skruva fast pumphuset på lagerfoten. På F7B med mutter (pos 33) och på F8/F9B/F95B med skruv (pos 25).
3. Fukta glidringen med såpvatten och pressa den i läge på axeln.
4. Montera på F7B/F95B bricka (pos 29) och låsring (pos 16) på axeln. F8B/F9B har ingen bricka.
5. Montera slitbrickan i pumphuset.
6. Applicera tätningsmedel på kam och kamskruvar. Skruva fast kammen.
7. Smörj impellern med vaselin eller dylikt och montera med en roterande rörelse i impellerns rotationsriktning.
8. Smörj pumphusets packningsyta med vaselin eller dylikt. Placera packningen i läge och skruva fast locket.

Packaging - Processing
Bid on Equipment
1-847-683-7720
www.bid-on-equipment.com

Modellspecifikation

Pump med neoprenimpeller och helkam

Pumptyp	Art nr	Anslutning
F7B-5000	10-24116-99	BSP 1"
F7B-5007	10-24116-98	NPTF 1"-11½
F8B-5000-VF	10-13025-99	Fläns*
F8B-5000-TSS	10-13176-99	Fläns*
F9B-5600	10-13027-99	BSP 2"
F9B-5607	10-13027-98	NPTF 2"-11½
F9B-5600-TSS	10-13178-99	Fläns**
F9B-5600-VF	10-13226-99	Fläns**
F95B-5000	10-13143-99	BSP 2½""
F95B-5007	10-13143-98	NPTF 2½"-8

Vidstående artikelnummer anger pump exklusive elektromagnetisk koppling.
Övriga varianter på förfrågan.

* Motfläns för F8B med gänga BSP 1½" alt NPTF 11½"-11½, se reservdelslista

** Motfläns för F9B med gänga BSP 2" alt NPTF 2"-11½, se reservdelslista

Elektromagnetisk koppling

Spänning	Art nr	Spår
12 V	05-32-1	2xA
24 V	05-32-2	2xA
12 V	05-32-3	1xB
24 V	05-32-4	1xB

Reservdelslista

Pos	Antal	Benämning	F7B-5000/-5007	F8B-5000/-VF F8B-5000-TSS	F9B-5600/-5607 F9B-5600-TSS/VF	F95B-5000/-5007
1	1	Pumphus	01-21862-3 1)	01-11206	01-11358-1 3)	01-13119-2
	1	Pumphus	01-21862-5 2)	-	01-11358-2 4)	-
	1	Pumphus-TSS	-	01-13002-1	01-13003	-
	1	Pumphus-VF	-	-	01-13224-1 5)	-
2	1	Lock	01-42441	01-42422-1	01-42422-1	01-35284-2
3	1	Axel	01-35084	01-35138	01-35138	01-35700
4	1	Kam 1/1	01-42679	01-42680	01-43137	01-35744
	1	Kam 2/3	01-42442	01-42425	01-43135	01-35854
	1	Kam 1/2	-	01-42755	01-43138	01-35853
5	1	Impeller	09-1028B (neopren)	09-819B (neopren)	-	09-820B (neopren)
	1	Impeller	09-1028B-9 (nitril)	09-819B-9 (nitril)	-	-
	1	Impeller	-	-	09-814B (neopren)	-
6	1	Packning	01-42445	01-42424	01-42424 6)	-
	1	O-ring	-	-	0.2172.142 7)	0.2172.142
7	1	Stift	01-42400	01-42426	01-42426	01-42426
8	1	Slitbricka	01-42443	01-42423	01-42423	01-42423

Packaging - Processing
Bid on Equipment
1-847-683-7720
www.bid-on-equipment.com

Pos	Antal	Benämning	F7B-5000/-5007	F8B-5000/-5007 F8B-5000-TSS	F9B-5600/-5607 F9B-5600-TSS/VF	F95B-5000/-5007
9	1	Lagerfot	01-24098	01-13020	01-13020	01-13131-1
10	1	Distanshylsa	01-45170	01-42747	01-42747	-
11	1	Fästring	-	01-35144-2	01-35144-2	-
12	1	V-ring	0.2230.015	0.2230.319	0.2230.319	0.2230.322
13	1	Mek tätning	09-20-115	09-20-118	09-20-118	09-20-534
14	2	Kullager	0.3431.778	0.3431.780	0.3431.780	se pos 39, 40
15	1	Låsring	0.0371.047	0.0371.062	0.0371.062	0.0371.080
16		Låsring	0.0370.516 (1 st)	0.0370.525 (2 st)	0.0370.525 (2 st)	0.0370.535 (1 st)
17	1	Koppling				
		12 V, 2xA-spår	0.3454.001	0.3454.001	0.3454.001	0.3454.001
		24 V, 2xA-spår	0.3454.002	0.3454.002	0.3454.002	0.3454.002
		12 V, 1xB-spår	0.3454.003	0.3454.003	0.3454.003	0.3454.003
		24 V, 1xB-spår	0.3454.004	0.3454.004	0.3454.004	0.3454.004
18	1	Kil	0.0502.001	0.0502.001	0.0502.001	0.0502.001
19		Bricka	0.0353.309 (1 st)	0.0353.309 (5 st)	0.0353.309 (5 st)	0.0353.309 (1 st)
20	1	Bricka	01-46789-06	01-46789-06	01-46789-06	01-46789-06
21	1	Skruv	0.0141.918	0.0141.918	0.0141.918	0.0141.918
22	3	Skruv	-	0.0300.565	0.0300.565	-
23	3	Bricka	-	0.0353.402	0.0353.402	0.0353.402
24	3	Skruv	0.0141.903	0.0141.903	0.0141.903	0.0141.903
25	4	Skruv	-	0.0144.002	0.0144.002	0.0141.922
26	2	Plugg	0.2500.805	0.2500.805	0.2500.805	-
27	1	Kamskruv 1/1	01-46794-01	01-46794-02	01-46794-02	01-46794-09 (2 st)
	1	Kamskruv 2/3	01-46794-07	01-46794-02	01-46794-02	01-46794-11
	1	Kamskruv 1/2	-	01-46794-08	01-46794-08	01-46794-11
28		Skruv	01-46794-05 (6 st)	0.0144.200 (5 st)	0.0144.200 (5 st)	0.0138.134 (5 st)
29	1	Bricka	01-45174	-	-	01-46323
31	1	Skruv	0.0144.001	-	-	-
32	1	Bricka	0.0353.402	-	-	0.0353.111
33	1	Mutter	0.0194.001	-	-	-
34	1	Låsring	0.0370.017	-	-	-
35	1	Bricka	01-45191	-	-	01-46322
36	2	Anslutning	-	-	-	01-24426-1 8)
	2	Anslutning	-	-	-	01-24426-2 9)
37	2	Packning	-	-	-	01-46319
38	1	Skruv	-	-	-	0.0141.917
39	1	Kullager	-	-	-	0.3431.743
40	1	Kullager	-	-	-	0.3431.043
41	1	Motflänsset	-	09-43112 (BSP)	09-46557-01 (BSP)	-
	1	Motflänsset	-	09-45562 (NPTF)	09-46557-02 (NPTF)	-
*	1	Servicekit	09-45590 (neopren)	09-45579 (neopren)	-	09-46371 (neopren)
		Servicekit	09-45591 (nitril)	09-45580 (nitril)	09-45582 (neopren)	
**	1	Monteringssats för koppling	09-46436	09-46437	09-46437	09-46437

**) pos 5, 6, 13, 28 **) pos 18,19, 20, 21, 24, 35/32*

1) BSP 1" – pump 10-24116-99
2) NPTF 1"-11½ – pump 10-24116-98
3) BSP 2" – pump 10-13027-99
4) NPTF 2"-11½ – pump 10-13027-98
5) Fläns – pump 10-13226-99
6) Pump 10-13027/13178-99
7) Pump 10-13226-99
8) BSP 2½" – pump 10-13143-99
9) NPTF 2½"-8 – pump 10-13143-98

Packaging - Processing
Bid on Equipment
1-847-683-7720
www.bid-on-equipment.com

Self-priming, flexible impeller pump of bronze with electro-magnetic clutch

Typical applications

- *Marine*
  Bilge pump, wash-down for decks and equipment, emergency engine cooling pump, emergency fire pump, fish washing.

- *Industry and agriculture*
  The pump can be mounted on the power take-off of a tractor, road grader etc for irrigation, washing etc.

Design features

Body:	Bronze
Impeller:	Neoprene or nitrile (F9B/F95B only neoprene)
Shaft:	Stainless steel. The shaft is mounted with permanently lubricated double ball bearings
Seal:	Mechanical
Cam:	Full or reduced
Connection:	See "Type designation", page 7
Clutch:	Electro-magnetic, 2xA-groove or 1xB-groove Supply voltage: 12 V (4 amps) DC 24 V (2 amps) DC

Pressure and capacity data

See page 26-28.

Service instructions

See parts list pages 7-8, 21-25.

Disassembly

1. Remove endcover and gasket.
2. Pull out the impeller using two screw drivers or other suitable implements.
3. Remove the cam and wash away residual traces of sealing compound on the cam and inside the pump body.
4. Remove the wear plate.
5. Remove the retaining ring (pos 16) and washer (F7B/F95B - pos 29) holding the mechanical seal. F8B/F9B has no washer.
6. Lubricate the shaft in front of the mechanical seal and press down the seal for easier removal from the shaft.
7. Remove the screws holding the pump body to the pedestal on F8B/F9B/F95B (pos 25). Loosen the nut (pos 33) on F7B. Disassemble the pump body.
8. Remove the ceramic ring.
9. Clean shaft, pump body, cam and endcover. Wash away any traces of sealing compound.

Assembly

1. Moisten the ceramic ring with soapy water (5% soft soap) and mount it in the pump body. Protect the sealing surfaces of the mechanical seal against grease and damages, as it will affect the seal function.
2. Fasten the pump body onto the pedestal. On F7B with nut (pos 33) and on F8B/F9B/F95B with screw (pos 25).
3. Moisten the rotating ring with soapy water and press it in its position on the shaft.
4. Fit the washer (F7B/F95B - pos 29) and the retaining ring (pos 16) on the shaft. F8B/F9B has no washer.
5. Mount the wear plate in the pump body.
6. Apply sealing compound to the cam and cam screws. Fasten the cam.
7. Lubricate the impeller with vaseline or the like and fit it with a rotating move-ment in the intended direction of impeller rotation.

Packaging - Processing
Bid on Equipment
1-847-683-7720
www.bid-on-equipment.com

8. Lubricate, with vaseline or the like, the surfaces of the pump body where the gasket is to be placed. Fit the gasket and mount the endcover.

Type designation

Pump with impeller neoprene and full cam

Pump type	Part No	Thread
F7B-5000	10-24116-99	BSP 1"
F7B-5007	10-24116-98	NPTF 1"-11½
F8B-5000-VF	10-13025-99	Flange*
F8B-5000-TSS	10-13176-99	Flange*
F9B-5600	10-13027-99	BSP 2"
F9B-5607	10-13027-98	NPTF 2"-11½
F9B-5600-TSS	10-13178-99	Flange**
F9B-5600-VF	10-13226-99	Flange**
F95B-5000	10-13143-99	BSP 2½"
F95B-5007	10-13143-98	NPTF 2½"-8

Part Nos exclude electromagnetic clutch.
Other variants on request.

* Port adaptor kit for F8B with thread BSP 1½" or NPTF 1½"-11½, see spare parts list
** Port adaptor kit for F9B with thread BSP 2" or NPTF 2"-11½, see spare parts list

Electro-magnetic clutch

Voltage	Part No	Pulley
12 V	05-32-1	2xA
24 V	05-32-2	2xA
12 V	05-32-3	1xB
24 V	05-32-4	1xB

Parts list

Pos	Nos	Description	F7B-5000/-5007	F8B-5000-VF F8B-5000-TSS	F9B-5600/-5607 F9B-5600-TSS/VF	F95B-5000/-5007
1	1	Body	01-21862-3 [1]	01-11206	01-11358-1 [3]	01-13119-2
	1	Body	01-21862-5 [2]	-	01-11358-2 [4]	-
	1	Body-TSS	-	01-13002-1	01-13003	-
	1	Body-VF	-	-	01-13224-1 [5]	-
2	1	Endcover	01-42441	01-42422-1	01-42422-1	01-35284-2
3	1	Shaft	01-35084	01-35138	01-35138	01-35700
4	1	Cam 1/1	01-42679	01-42680	01-43137	01-35744
	1	Cam 2/3	01-42442	01-42425	01-43135	01-35854
	1	Cam 1/2	-	01-42755	01-43138	01-35853
5	1	Impeller	09-1028B (neoprene)	09-819B (neoprene)	-	09-820B (neoprene)
	1	Impeller	09-1028B-9 (nitrile)	09-819B-9 (nitrile)	-	-
	1	Impeller	-	-	09-814B (neoprene)	-
6	1	Gasket	01-42445	01-42424	01-42424 [6]	-
	1	O-ring	-	-	0.2172.142 [7]	0.2172.142

Packaging - Processing
Bid on Equipment
1-847-683-7720
www.bid-on-equipment.com

Pos	Nos	Description	F7B-5000/-5007	F8B-5000/-5007 F8B-5000-TSS	F9B-5600/-5607 F9B-5600-TSS/VF	F95B-5000/-5007
7	1	Pin	01-42400	01-42426	01-42426	01-42426
8	1	Wear plate	01-42443	01-42423	01-42423	01-42423
9	1	Pedestal	01-24098	01-13020	01-13020	01-13131-1
10	1	Spacer	01-45170	01-42747	01-42747	-
11	1	Adaptor ring	-	01-35144-2	01-35144-2	-
12	1	V-ring	0.2230.015	0.2230.319	0.2230.319	0.2230.322
13	1	Mech. seal	09-20-115	09-20-118	09-20-118	09-20-534
14	2	Ball bearing	0.3431.778	0.3431.780	0.3431.780	see pos 39, 40
15	1	Retaining ring	0.0371.047	0.0371.062	0.0371.062	0.0371.080
16		Retaining ring	0.0370.516 (1 pc)	0.0370.525 (2 pcs)	0.0370.525 (2 pcs)	0.0370.535 (1 pc)
17	1	Clutch				
		12 V, 2xA-groove		0.3454.001	0.3454.001	0.3454.001
0.3454.001						
		24 V, 2xA-groove		0.3454.002	0.3454.002	0.3454.002
0.3454.002						
		12 V, 1xB-groove	0.3454.003	0.3454.003	0.3454.003	0.3454.003
		24 V, 1xB-groove	0.3454.004	0.3454.004	0.3454.004	0.3454.004
18	1	Key	0.0502.001	0.0502.001	0.0502.001	0.0502.001
19		Washer	0.0353.309 (1 pc)	0.0353.309 (5 pcs)	0.0353.309 (5 pcs)	0.0353.309 (1 pc)
20	1	Washer	01-46789-06	01-46789-06	01-46789-06	01-46789-06
21	1	Screw	0.0141.918	0.0141.918	0.0141.918	0.0141.918
22	3	Screw	-	0.0300.565	0.0300.565	-
23	3	Washer	-	0.0353.402	0.0353.402	0.0353.402
24	3	Screw	0.0141.903	0.0141.903	0.0141.903	0.0141.903
25	4	Screw	-	0.0144.002	0.0144.002	0.0141.922
26	2	Plug	0.2500.805	0.2500.805	0.2500.805	-
27	1	Camscrew 1/1	01-46794-01	01-46794-02	01-46794-02	01-46794-09 (2 pcs)
	1	Camscrew 2/3	01-46794-07	01-46794-02	01-46794-02	01-46794-11
	1	Camscrew 1/2	-	01-46794-08	01-46794-08	01-46794-11
28		Screw	01-46794-05 (6 pcs)	0.0144.200 (5 pcs)	0.0144.200(5 pcs)	0.0138.134 (5 pcs)
29	1	Washer	01-45174	-	-	01-46323
31	1	Screw	0.0144.001	-	-	-
32	1	Washer	0.0353.402	-	-	0.0353.111
33	1	Nut	0.0194.001	-	-	-
34	1	Retaining ring	0.0370.017	-	-	-
35	1	Washer	01-45191	-	-	01-46322
36	2	Thread	-	-	-	01-24426-1 8)
	2	Thread	-	-	-	01-24426-2 9)
37	2	Gasket	-	-	-	01-46319
38	1	Screw	-	-	-	0.0141.917
39	1	Ball bearing	-	-	-	0.3431.743
40	1	Ball bearing	-	-	-	0.3431.043
41	1	Port adaptor	-	09-43112 (BSP)	09-46557-01 (BSP)	-
	1	Port adaptor	-	09-45562 (NPTF)	09-46557-02 (NPTF)	-
*	1	Service kit	09-45590 (neoprene)	09-45579 (neoprene)	-	09-46371 (neoprene)
		Service kit	09-45591 (nitrile)	09-45580 (nitrile)	09-45582 (neoprene)	
**	1	Assembly kit	09-46436	09-46437	09-46437	09-46437

**) pos 5, 6, 13, 20 **) pos 18, 19, 20, 21, 24, 35/32 for pump 10-24116-99*

1) BSP 1" – pump 10-24116-99 2) NPTF 1"-11½ – pump 10-24116-98 3) BSP 2" – pump 10-13027-99

4) NPTF 2"-11½ – pump 10-13027-98 5) Flange – pump 10-13226-99 6) Pump 10-13027/13178-99

7) Pump 10-13226-99 8) BSP 2½" – pump 10-13143-99 9) NPTF 2½"-8 – pump 10-13143-98

Packaging - Processing
Bid on Equipment
1-847-683-7720
www.bid-on-equipment.com

Selbstansaugende flexible Impellerpumpe aus Bronze auf Sockel montiert

Anwendungsbeispiele

- *Marinebereich*
  Lenzpumpe, Deckwaschpumpe, Kühlwasserpumpe für Motoren, Feuerlöschpumpe, zum Abspülen von Ausrüstungen und eingebrachter Fänge auf Fischereifahrzeugen.

- *Industrie und Landwirtschaft*
  Die Pumpe kann an die Kraftabnahmen der Motoren von LKW's, Traktoren, Strassenbaumaschinen etc. zum Bewässern, Spülen angebracht werden.

Technische Beschreibung

Pumpengehäuse:	Bronze
Impeller:	Neoprene oder Nitrile (F9B/F95B -Neoprene)
Welle:	Edelstahl mit zwei dauergeschmierten Kugellagern
Dichtung:	Gleitringdichtung
Kamm:	1/1 oder reduzierter Kamm
Anschlüsse:	Siehe "Ausführung", Seite 10
Kupplung:	Elektromagnetisch, 2xA-Profil oder, 1xB-Profil
Spannung:	12 V (4 A) 24 V (2 A)

Druck und Leistungsdaten

Siehe Seite 26-28.

Bedienungsanleitungen

Siehe Ersatzteilliste Seite 10-11, 21-25.

Demontage

1. Deckelschrauben lösen, Deckel und Dichtung entfernen.
2. Der Impeller mit Hilfe von zwei Schraubenziehern oder dem Impellerabzieher herausziehen.
3. Nach Ausbau des Kamms Dichtungsreste vom Pumpengehäuse und Kamm entfernen.
4. Verschleisplatte entfernen.
5. Sicherungsring (Pos 16) und Scheibe (F7B/F95B) der mechanischen Dichtung entfernen.
   F8B/F9B ist keine Scheibe montiert.
6. Welle vor der mechanischen Dichtung einfetten und Dichtung über die Welle einpressen.
7. Schrauben die das Pumpengehäuse auf dem Sockel halten entfernen. Gilt für die Pumpen F8B/F9B/F95B (Pos 25). Bei F7B Muttern (Pos 33) abschrauben. Demontage des Pumpengehäuse.
8. Keramikring aus dem Pumpengehäuse herausnehmen.
9. Welle, Pumpengehäuse, Kamm und Deckel von Dichtungsresten reinigen.

Montage

1. Keramikring mit Seifenlauge anfeuchten (max 5% Mischung) und in das Pumpengehäuse einfügen. Fett und Beschädigung vermeiden, Dichtungseffekt wird sonst verschlechtert.
2. Pumpengehäuse F8B/F9B/F95B mit den Schrauben auf dem Sockel festschrauben (Pos 25). F7B wird mit Muttern (Pos 33) befestigt.
3. Gleitring mit Seifenlauge anfeuchten und über die Welle pressen.
4. Bei F7B/F95B Scheibe (Pos 29) montieren und mit dem Sicherungsring (Pos 16) an der Welle sichern. F8B/F9B ohne Scheibe.
5. Verschleisplatte im Pumpengehäuse montieren.
6. Dichtungsmittel auf den Kamm und die Kammschrauben auftragen und die Schrauben fest anziehen.

Packaging - Processing
Bid on Equipment
1-847-683-7720
www.bid-on-equipment.com

7. Vaseline oder desgleichen auf den Impeller auftragen und diesen mit einer leichten Bewegung in Drehrichtung eindrücken.

8. Auf die Dichtungsfläche des Pumpengehäuse Vaseline oder desgleichen auftragen, Packung auflegen und den Deckel festschrauben.

Ausführungen

Pumpe mit Impeller Neopren und 1/1 Kamm

Pumpentyp	Artikel-Nr.	Anschluss
F7B-5000	10-24116-99	BSP 1"
F7B-5007	10-24116-98	NPTF 1"-11½
F8B-5000-VF	10-13025-99	Flansch*
F8B-5000-TSS	10-13176-99	Flansch*
F9B-5600	10-13027-99	BSP 2"
F9B-5607	10-13027-98	NPTF 2"-11½
F9B-5600-TSS	10-13178-99	Flansch**
F9B-5600-VF	10-13226-99	Flansch**
F95B-5000	10-13143-99	BSP 2½"
F95B-5007	10-13143-98	NPTF 2½"-8

Artikel-Nr. links, ohne elektromagnetische Kupplung.
Weitere Ausführungen auf Anfrage.

* Anschlußadaptersatz für F8B mit gewinde BSP 1½" oder NPTF 1½"-11½, siehe Erstatzteilliste
** Anschlußadaptersatz für F9B mit gewinde BSP 2" oder NPTF 2"-11½, siehe Erstatzteilliste

Elektromagnetische Kupplung

Spannung	Artikel-Nr.	Profil
12 V	05-32-1	2xA
24 V	05-32-2	2xA
12 V	05-32-3	1xB
24 V	05-32-4	1xB

Ersatzteilliste

Pos	Nos	Bezeichnung	F7B-5000/-5007	F8B-5000-VF F8B-5000-TSS	F9B-5600/-5607 F9B-5600-TSS/VF	F95B-5000/-5007
1	1	Pumpengehäuse	01-21862-3 1)	01-11206	01-11358-1 3)	01-13119-2
	1	Pumpengehäuse	01-21862-5 2)	-	01-11358-2 4)	-
	1	Pumpengehäuse-TSS		01-13002-1	01-13003	-
	1	Pumpengehäuse-VF		-	01-13224-1 5)	-
2	1	Deckel	01-42441	01-42422-1	01-42422-1	01-35284
3	1	Welle	01-35084	01-35138	01-35138	01-35700
4	1	Kamm 1/1	01-42679	01-42680	01-43137	01-35744
4	1	Kamm 2/3	01-42442	01-42425	01-43135	01-35854
4	1	Kamm 1/2	-	01-42755	01-43138	01-35853
5	1	Impeller	09-1028B (Neopren)	09-819B (Neopren)	-	09-820B (Neopren)
	1	Impeller	09-1028B-9 (Nitril)	09-819B-9 (Nitril)	-	-
	1	Impeller	-	-	09-814B (Neopren)	-
6	1	Dichtung	01-42445	01-42424	01-42424 6)	-
	1	O-ring	-	-	0.2172.142 7)	0.2172.142

Packaging - Processing
Bid on Equipment
1-847-683-7720
www.bid-on-equipment.com

Pos	Nos	Bezeichnung	F7B-5000/-5007	F8B-5000/-5007 F8B-5000-TSS	F9B-5600/-5607 F9B-5600-TSS/VF	F95B-5000/-5007
7	1	Stift	01-42400	01-42426	01-42426	01-42426
8	1	Schleissplatte	01-42443	01-42423	01-42423	01-42423
9	1	Lagerfuss	01-24098	01-13020	01-13020	01-13131-1
10	1	Distanzhülze	01-45170	01-42747	01-42747	-
11	1	Befestigungsring	-	01-35144-2	01-35144-2	-
12	1	V-ring	0.2230.015	0.2230.319	0.2230.319	0.2230.322
13	1	Gleitringdichtung		09-20-115	09-20-118	09-20-118
09-20-534						
14	2	Kugellager	0.3431.778	0.3431.780	0.3431.780	Siehe pos 39, 40
15	1	Sicherungsring	0.0371.047	0.0371.062	0.0371.062	0.0371.080
16		Sicherungsring	0.0370.516 (1 st)	0.0370.525 (2 st)	0.0370.525 (2 st)	0.0370.535 (1 st)
17	1	Kupplung				
		12 V, 2xA-Profil	0.3454.001	0.3454.001	0.3454.001	0.3454.001
		24 V, 2xA-Profil	0.3454.002	0.3454.002	0.3454.002	0.3454.002
		12 V, 1xB-Profil	0.3454.003	0.3454.003	0.3454.003	0.3454.003
		24 V, 1xB-Profil	0.3454.004	0.3454.004	0.3454.004	0.3454.004
18	1	Keil	0.0502.001	0.0502.001	0.0502.001	0.0502.001
19		Scheibe	0.0353.309 (1 st)	0.0353.309 (5 st)	0.0353.309 (5 st)	0.0353.309 (1 st)
20	1	Scheibe	01-46789-06	01-46789-06	01-46789-06	01-46789-06
21	1	Schraube	0.0141.918	0.0141.918	0.0141.918	0.0141.918
22	3	Schraube	-	0.0300.565	0.0300.565	-
23	3	Scheibe	-	0.0353.402	0.0353.402	0.0353.402
24	3	Schraube	0.0141.903	0.0141.903	0.0141.903	0.0141.903
25	4	Schraube	-	0.0144.002	0.0144.002	0.0141.922
26	2	Stopfen	0.2500.805	0.2500.805	0.2500.805	-
27	1	Kammschraube 1/1	01-46794-01	01-46794-02	01-46794-02	01-46794-09 (2 st)
1		Kammschraube 2/3	01-46794-07	01-46794-02	01-46794-02	01-46794-11
	1	Kammschraube 1/2	-	01-46794-08	01-46794-08	01-46794-11
28		Schraube	01-46794-05 (6 st)	0.0144.200 (5 st)	0.0144.200 (5 st)	0.0138.134 (5 st)
29	1	Scheibe	01-45174	-	-	01-46323
31	1	Schraube	0.0144.001	-	-	-
32	1	Scheibe	0.0353.402	-	-	0.0353.111
33	1	Mutter	0.0194.001	-	-	-
34	1	Sicherungsring	0.0370.017	-	-	-
35	1	Scheibe	01-45191	-	-	01-46322
36	2	Anschluss	-	-	-	01-24426-1 8)
	2	Anschluss	-	-	-	01-24426-2 9)
37	2	Dichtung	-	-	-	01-46319
38	1	Schraube	-	-	-	0.0141.917
39	1	Kugellager	-	-	-	0.3431.743
40	1	Kugellager	-	-	-	0.3431.043
41	1	Anschlußsatz	-	09-43112 (BSP)	09-46557-01 (BSP)	-
	1	Anschlußsatz	-	09-45562 (NPTF)	09-46557-02 (NPTF)	-
*	1	Servicesatz	09-45590 (Neopren)	09-45579 (Neopren)	-	09-46371 (Neopren)
		Servicesatz	09-45591 (Nitril)	09-45580 (Nitril)	09-45582 (Neopren)	
**	1	Montagesatz für Kupplung	09-46436	09-46437	09-46437	09-46437

**) pos 5, 6, 13, 28 **) pos 18, 19, 20, 21, 24, 35/32*

1) BSP 1" – Pumpe 10-24116-99 2) NPTF 1"-11½ – Pumpe 10-24116-98 3) BSP 2" – Pumpe 10-13027-99
4) NPTF 2"-11½ – Pumpe 10-13027-98 5) Flansch – Pumpe 10-13226-99 6) Pumpe 10-13027/13178-99
7) Pumpe 10-13226-99 8) BSP 2½" – Pumpe 10-13143-99 9) NPTF 2½"-8 – Pumpe 10-13143-98

Packaging - Processing
Bid on Equipment
1-847-683-7720
www.bid-on-equipment.com

Pompes auto-amorçantes en bronze à rotor flexible avec embrayage electromagnétique

Types d'applications

- *Marine*
  Pompe de cale, pompe de lavage de pont, pompe de secours pour refroidissement, pompe d'incendie, lavage de poisson.

- *Industrie et agriculture*
  Pompe pour montage sur prise de force de tracteur, d'engins travaux publics, pompe d'irrigation, lavage, etc.

Specification

Corps:	Bronze
Rotor:	Néoprène ou nitrile (F9B/F95B - néoprène)
Arbre:	Acier inoxydable L'arbre est monté sur deux roulements lubrifiés "à vie"
Joint:	Mécanique
Came:	Pleine ou réduite
Orifices:	Voir "Spécifications du modèle", page 13
Embrayage:	Gorge electromagnétique, 2 x rainure A ou 1 x rainure B Tension courant continu: 12 V (4 A) 24 V (2 A)

Pressions et débits

Voir page 26-28.

Instructions d'entretien

Voir liste des pièces pages 13-14, 21-25.

Démontage

1. Démonter le couvercle et le joint.
2. Retirer le rotor en utilisant 2 tournevis ou autre objet adéquat.
3. Retirer la came et nettoyer toute trace de pâte à joint sur la came et à l'intèrieur du corps de la pompe.
4. Déposer la plaque d'usure.
5. Retirer le clips (rep 16) et la rondelle (F7B/F95B - rep 29) retenant l'étancheité. F8B/F9B n'ont pas de rondelle.
6. Lubrifier l'arbre (eau ou huile) afin de faciliter le glissement de l'étancheité, la presser puis la sortir.
7. Dévisser le corps de pompe de son palier support (pour F8B/F9B/F95B - rep 25). Désserer l'ecrou (rep 33) pour F7B. Démonter le corps.
8. Rétirer la glace en ceramique.
9. Nettoyer toutes ces pièces et retirer toute trace de pâte à joint.

Montage

1. Mouiller la glace en ceramique avec de l'eau savonneuse et la mettre en place dans le corps de pompe. Protegér des chocs les faces tournantes du joint - ne pas les graisser.
2. Fixer le corps de pompe sur son palier support: sur F7B par serrage de l'écrou (rep 33), sur F8B/F9B/F95B par les vis (rep 25).
3. Mouiller la partie tournante du joint avec de l'eau savonneuse et la mettre en place sur l'arbre.
4. Mettre en place la rondelle sur F7B/F95B (rep 29) et le circlips (rep 16) sur l'arbre. F8B/F9B n'ont pas de rondelle.
5. Mettre la plaque d'usure dans le corps de pompe.
6. Mettre de la pâte à joint sur la came et la vis de came, puis serrer la vis de came.
7. Mettre de la vaseline ou similaire, sur le rotor et le mettre en place en lui imprimant un mouvement de rotation, dans le même sens que le sens de rotation definitive de la pompe.
8. Mettre un peu de vaseline ou similaire sur le face du couvercle, côté rotor puis visser le couvercle avec son joint.

Packaging - Processing
Bid on Equipment
1-847-683-7720
www.bid-on-equipment.com

Spécifications du modèle

Pompe avec rotor néoprène et came hauteur maxi

Modèle	Référence	
F7B-5000	10-24116-99	BSP 1"
F7B-5007	10-24116-98	NPTF 1"-11$^1/_2$
F8B-5000-VF	10-13025-99	Flange*
F8B-5000-TSS	10-13176-99	Flange*
F9B-5600	10-13027-99	BSP 2"
F9B-5607	10-13027-98	NPTF 2"-11$^1/_2$
F9B-5600-TSS	10-13178-99	Flange**
F9B-5600-VF	10-13226-99	Flange**
F95B-5000	10-13143-99	BSP 2$^1/_2$"
F95B-5007	10-13143-98	NPTF 2$^1/_2$"-8

Orifice

Les références ne comprennent pas l'embrayage electromagnétique.

Options:

* Kit de contrebrides pour F8B ø 1$^1/_2$" BSP ou NPTF

** Kit de contrebrides pour F9B

Embrayage electromagnétique

Tension	Référence	Gorge
12 V	05-32-1	2xA
24 V	05-32-2	2xA
12 V	05-32-3	1xB
24 V	05-32-4	1xB

Liste des pièces

Pos	Nos	Description	F7B-5000/-5007	F8B-5000-VF F8B-5000-TSS	F9B-5600/-5607 F9B-5600-TSS/VF	F95B-5000/-5007
1	1	Corps	01-21862-3 [1]	01-11206	01-11358-1 [3]	01-13119-2
	1	Corps	01-21862-5 [2]	-	01-11358-2 [4]	-
	1	Corps-TSS	-	01-13002-1	01-13003	-
	1	Corps-VF	-	-	01-13224-1 [5]	-
2	1	Couvercle	01-42441	01-42422-1	01-42422-1	01-35284-2
3	1	Arbre	01-35084	01-35138	01-35138	01-35700
4	1	Came 1/1	01-42679	01-42680	01-43137	01-35744
	1	Came 2/3	01-42442	01-42425	01-43135	01-35854
	1	Came 1/2	-	01-42755	01-43138	01-35853
5	1	Rotor	09-1028B (néoprène)	09-819B (néoprène)	-	09-820B (néoprène)
	1	Rotor	09-1028B-9 (nitrile)	09-819B-9 (nitrile)	-	-
	1	Rotor	-	-	09-814B (néoprène)	-
6	1	Joint	01-42445	01-42424	01-42424 [6]	-
	1	O-ring	-	-	0.2172.142 [7]	0.2172.142
7	1	Ergot	01-42400	01-42426	01-42426	01-42426
8	1	Plaque d'usure	01-42443	01-42423	01-42423	01-42423
9	1	Palier/Support	01-24098	01-13020	01-13020	01-13131-1
10	1	Entretoise	01-45170	01-42747	01-42747	-

Packaging - Processing
Bid on Equipment
1-847-683-7720
www.bid-on-equipment.com

Pos	Nos	Description	F7B-5000/-5007	F8B-5000/-5007 F8B-5000-TSS	F9B-5600/-5607 F9B-5600-TSS/VF	F95B-5000/-5007
11	1	Bague adapteur	-	01-35144-2	01-35144-2	-
	12	1	V-ring	0.2230.015	0.2230.319	0.2230.319
0.2230.322						
13	1	Garniture mech.	09-20-115	09-20-118	09-20-118	09-20-534
14	2	Roulements				
		à billes	0.3431.778	0.3431.780	0.3431.780	voir pos 39, 40
15	1	Clips	0.0371.047	0.0371.062	0.0371.062	0.0371.080
16		Clips	0.0370.516 (1 pc)	0.0370.525 (2 pcs)	0.0370.525 (2 pcs)	0.0370.535 (1 pc)
17	1	Embrayage				
		12 V, 2 gorges A	0.3454.001	0.3454.001	0.3454.001	0.3454.001
		24 V, 2 gorges A	0.3454.002	0.3454.002	0.3454.002	0.3454.002
		12 V, 1 gorge B	0.3454.003	0.3454.003	0.3454.003	0.3454.003
		24 V, 1 gorge B	0.3454.004	0.3454.004	0.3454.004	0.3454.004
18	1	Clavette	0.0502.001	0.0502.001	0.0502.001	0.0502.001
19		Rondelle	0.0353.309 (1 pc)	0.0353.309 (5 pcs)	0.0353.309 (5 pcs)	0.0353.309 (1 pc)
20	1	Rondelle	01-46789-06	01-46789-06	01-46789-06	01-46789-06
21	1	Vis	0.0141.918	0.0141.918	0.0141.918	0.0141.918
22	3	Vis	-	0.0300.565	0.0300.565	-
23	3	Rondelle	-	0.0353.402	0.0353.402	0.0353.402
24	3	Vis	0.0141.903	0.0141.903	0.0141.903	0.0141.903
25	4	Vis	-	0.0144.002	0.0144.002	0.0141.922
26	2	Bouchon	0.2500.805	0.2500.805	0.2500.805	-
27	1	Vis de came 1/1	01-46794-01	01-46794-02	01-46794-02	01-46794-09(2 pcs)
	1	Vis de came 2/3	01-46794-07	01-46794-02	01-46794-02	01-46794-11
	1	Vis de came 1/2	-	01-46794-08	01-46794-08	01-46794-11
28		Vis	01-46794-05 (6 pcs)	0.0144.200 (5 pcs)	0.0144.200 (5 pcs)	0.0138.134 (5 pcs)
29	1	Rondelle	01-45174	-	-	01-46323
31	1	Vis	0.0144.001	-	-	-
32	1	Rondelle	0.0353.402	-	-	0.0353.111
33	1	Ecrou	0.0194.001	-	-	-
34	1	Clips	0.0370.017	-	-	-
35	1	Rondelle	01-45191	-	-	01-46322
36	2	Raccord	-	-	-	01-24426-1 8)
	2	Raccord	-	-	-	01-24426-2 9)
37	2	Joint	-	-	-	01-46319
38	1	Vis	-	-	-	0.0141.917
39	1	Roulements à billes		-	-	0.3431.743
40	1	Roulements à billes		-	-	0.3431.043
41	1	Jeu d'adapteur	-	09-43112 (BSP)	09-46557-01 (BSP)	-
	1	Jeu d'adapteur	-	09-45562 (NPTF)	09-46557-02 (NPTF)	-
*	1	Kit de réparation		09-45590 (néoprène)	09-45579 (néoprène)	- 09-46371 (néoprène)
		Kit de réparation		09-45591 (nitrile)	09-45580 (nitrile)	09-45582 (néoprène)
**	1	Kit de montage pour embrayage	09-46436	09-46437	09-46437	09-46437

**) pos 5, 6, 13, 28 **) pos 18,19, 20, 21, 24, 35/32*

1) BSP 1" – pompe 10-24116-99
2) NPTF 1"-11½ – pompe 10-24116-98
3) BSP 2" – pompe 10-13027-99
4) NPTF 2"-11½ – pompe 10-13027-98
5) Flange – pompe 10-13226-99
6) Pompe 10-13027/13178-99
7 Pompe 10-13226-99
8) BSP 2½" – pompe 10-13143-99
9) NPTF 2½"-8 – pompe 10-13143-98

Packaging - Processing
Bid on Equipment
1-847-683-7720
www.bid-on-equipment.com

Bombas de bronce autocebantes de impulsor flexible y con embrague electromagnético

Aplicaciones usuales

- *Maritimo*
  Bomba de achique, baldeo, bomba de refrigeración para motores, bomba contra incendios, lavado de pescado, etc.

- *Industria y agricultura*
  La bomba puede montarse en la toma de un tractor y otras máquinas de obras públicas para fumigar, regar, lavar, etc.

Características técnicas

Cuerpo:	Bronce
Impulsor:	Neopreno o nitrilo (F9B/F95B - neopreno)
Eje:	Acero inoxidable con doble cojinete a bolas de engrase permanente
Retén:	Mecánico
Leva:	Completa o reducida
Conexión:	Ver "Modelo", página 16
Embrague:	Electromagnético, dos canales 2 x A o un canal 1 x B Tensión (corriente continua): 12 V (4 A) 24 V (2 A)

Caudales y presiones

Ver página 26-28.

Instrucciones mantenimiento

Ver despiece en página 16-17, 21-25.

Desmontaje

1. Quitar la tapa y la junta.
2. Sacar el impulsor utilizando dos destornilladores.
3. Desmontar la leva y limpiar los residuos del interior de la bomba y de la leva.
4. Quitar la pletina.
5. Sacar el anillo de fijación (pos 16) y la arandela (F7B/F95B - pos 29), dejando el retén macánico. La F8B/F9B no tienen arandela.
6. Engrasar el eje por delante del retén mecánico y presionar hacia abajo el retén para facilitar su extracción .
7. En los modelos F8B/F9B/F95B, sacar los tornillos que fijan la bomba al pedestal (pos 25). En el modelo F7B, sacar la tuerca (pos 33). Desmontar el cuerpo.
8. Quitar el aro cerámico.
9. Limpiar el eje, el interior de la bomba, la leva y la tapa. Sacar cualquier resto de grasa o silicona.

Montaje

1. Montar el aro cerámico en el interior de la bomba utilizando agua jabonosa (5% jabón suave). Proteger la parte estanca del retén mecánico de la grasa o desperfectos, ya que dañaría su estanqueidad.
2. Atornillar la bomba al pedestal. En el modelo F7B con la tuerca (pos 33) y en F8B/F9B/F95B con los tornillos (pos 25).
3. Con agua jabonosa colocar el aro giratorio en el eje.
4. Poner la arandela (F7B/F95B - pos 29) y el anillo de fijación (pos 16) en el eje. Los modelos F8B/F9B no llevan arandela.
5. Montar la pletina dentro de la bomba.
6. Aplicar silicona en la leva y su tornillo. Fijar la leva.
7. Lubricar el impulsor con vaselina o similar y colocarlo con un movimiento de rotación en el sentido de giro del impulsor.
8. Lubricar con vaselina o similar la parte de la bomba donde deba colocarse la junta. Poner la junta y atornillar la tapa.

Packaging - Processing
Bid on Equipment
1-847-683-7720
www.bid-on-equipment.com

Modelo

Bomba con impulsor de neopreno y leva entera

Tipo	Modelo	Conexión
F7B-5000	10-24116-99	BSP 1"
F7B-5007	10-24116-98	NPTF 1"-11$^1/_2$
F8B-5000-VF	10-13025-99	Brida*
F8B-5000-TSS	10-13176-99	Brida*
F9B-5600	10-13027-99	BSP 2"
F9B-5607	10-13027-98	NPTF 2"-11$^1/_2$
F9B-5600-TSS	10-13178-99	Brida**
F9B-5600-VF	10-13226-99	Brida**
F95B-5000	10-13143-99	BSP 2$^1/_2$"
F95B-5007	10-13143-98	NPTF 2$^1/_2$"-8

Estos modelos no incluyen el embrague electromagnético. Otras varaintes sobre pedido.

* Juego adaptor para F8B con rosca BSP 1$^1/_2$" o NPTF 1$^1/_2$"-11$^1/_2$, ver lista de accesorios

** Juego adaptor para F9B con rosca BSP 2" o NPTF 2"-11$^1/_2$, ver lista de accesorios

Embrague electromagnético

Tensión	Modelo	Polea
12 V	05-32-1	2xA
24 V	05-32-2	2xA
12 V	05-32-3	1xB
24 V	05-32-4	1xB

Lista de piezas

Pos	Nos	Descripción	F7B-5000/-5007	F8B-5000-VF F8B-5000-TSS	F9B-5600/-5607 F9B-5600-TSS/VF	F95B-5000/-5007
1	1	Cuerpo	01-21862-3 [1]	01-11206	01-11358-1 [3]	01-13119-2
	1	Cuerpo	01-21862-5 [2]	-	01-11358-2 [4]	-
	1	Cuerpo-TSS	-	01-13002-1	01-13003	-
	1	Cuerpo-VF	-	-	01-13224-1 [5]	
2	1	Tapa	01-42441	01-42422-1	01-42422-1	01-35284-2
3	1	Eje	01-35084	01-35138	01-35138	01-35700
4	1	Leva 1/1	01-42679	01-42680	01-43137	01-35744
	1	Leva 2/3	01-42442	01-42425	01-43135	01-35854
	1	Leva 1/2	-	01-42755	01-43138	01-35853
5	1	Impulsor	09-1028B (neopreno)	09-819B (neopreno)	-	09-820B (neopreno)
	1	Impulsor	09-1028B-9 (nitrilo)	09-819B-9 (nitrilo)	-	-
	1	Impulsor	-	-	09-814B (neopreno)	-
6	1	Junta	01-42445	01-42424	01-42424 [6]	-
	1	O-ring	-	-	0.2172.142 [7]	0.2172.142
7	1	Cabilla	01-42400	01-42426	01-42426	01-42426
8	1	Pletina	01-42443	01-42423	01-42423	01-42423

Packaging - Processing
Bid on Equipment
1-847-683-7720
www.bid-on-equipment.com

Pos	Nos	Descripción	F7B-5000/-5007	F8B-5000/-5007 F8B-5000-TSS	F9B-5600/-5607 F9B-5600-TSS/VF	F95B-5000/-5007
9	1	Pedestal	01-24098	01-13020	01-13020	01-13131-1
10	1	Separador	01-45170	01-42747	01-42747	-
11	1	Anillo	-	01-35144-2	01-35144-2	-
12	1	Retén labial	0.2230.015	0.2230.319	0.2230.319	0.2230.322
13	1	Retén mecánico	09-20-115	09-20-118	09-20-118	09-20-534
14	2	Cojinete	0.3431.778	0.3431.780	0.3431.780	see pos 39, 40
15	1	Anillo fijación	0.0371.047	0.0371.062	0.0371.062	0.0371.080
16		Anillo fijación	0.0370.516(1 pc)	0.0370.525 (2 pcs)	0.0370.525 (2 pcs)	0.0370.535 (1 pc)
17	1	Embrague				
		12 V, 2xA-canales		0.3454.001	0.3454.001	0.3454.001
0.3454.001						
		24 V, 2xA-canales		0.3454.002	0.3454.002	0.3454.002
0.3454.002						
		12 V, 1xB-canal	0.3454.003	0.3454.003	0.3454.003	0.3454.003
		24 V, 1xB-canal	0.3454.004	0.3454.004	0.3454.004	0.3454.004
18	1	Chaveta	0.0502.001	0.0502.001	0.0502.001	0.0502.001
19		Arandela	0.0353.309 (1 pc)	0.0353.309 (5 pcs)	0.0353.309 (5 pcs)	0.0353.309 (1 pc)
20	1	Arandela	01-46789-06	01-46789-06	01-46789-06	01-46789-06
21	1	Tornillo	0.0141.918	0.0141.918	0.0141.918	0.0141.918
22	3	Tornillo	-	0.0300.565	0.0300.565	-
23	3	Arandela	-	0.0353.402	0.0353.402	0.0353.402
24	3	Tornillo	0.0141.903	0.0141.903	0.0141.903	0.0141.903
25	4	Tornillo	-	0.0144.002	0.0144.002	0.0141.922
26	2	Tapón	0.2500.805	0.2500.805	0.2500.805	-
27	1	Tornillo leva 1/1	01-46794-01	01-46794-02	01-46794-02	01-46794-09 (2 pcs)
	1	Tornillo leva 2/3	01-46794-07	01-46794-02	01-46794-02	01-46794-11
	1	Tornillo leva 1/2	-	01-46794-08	01-46794-08	01-46794-11
28		Tornillo	01-46794-05 (6 pcs)	0.0144.200 (5 pcs)	0.0144.200 (5 pcs)	0.0138.134 (5 pcs)
29	1	Arandela	01-45174	-	-	01-46323
31	1	Tornillo	0.0144.001	-	-	-
32	1	Arandela	0.0353.402	-	-	0.0353.111
33	1	Tuerca	0.0194.001	-	-	-
34	1	Anillo fijación	0.0370.017	-	-	-
35	1	Arandela	01-45191	-	-	01-46322
36	2	Racor	-	-	-	01-24426-1 8)
	2	Racor	-	-	-	01-24426-2 9)
37	2	Junta	-	-	-	01-46319
38	1	Tornillo	-	-	-	0.0141.917
39	1	Cojinete	-	-	-	0.3431.743
40	1	Cojinete	-	-	-	0.3431.043
41	1	Racor	-	09-43112 (BSP)	09-46557-01 (BSP)	-
	1	Racor	-	09-45562 (NPTF)	09-46557-02 (NPTF)	-
*	1	Juego recambios	09-45590 (neopreno)	09-45579 (neopreno)	-	09-46371 (neopreno)
		Juego recambios	09-45591 (nitrilo)	09-45580 (nitrilo)	09-45582 (neopreno)	
**	1	Recambios	09-46436	09-46437	09-46437	09-46437

**) pos 5, 6, 13, 28 **) pos 18, 19, 20, 21, 24, 35/32*

1) BSP 1" – bomba 10-24116-99 2) NPTF 1"-11½ – bomba 10-24116-98 3) BSP 2" – bomba 10-13027-99
4) NPTF 2"-11½ – bomba 10-13027-98 5) Brida – bomba 10-13226-99 6) Bomba 10-13027/13178-99
7) Bomba 10-13226-99 8) BSP 2½" – bomba 10-13143-99 9) NPTF 2½"-8 – bomba 10-13143-98

Packaging - Processing
Bid on Equipment
1-847-683-7720
www.bid-on-equipment.com

Pompe autoadescanti in bronzo con frizione elettromagnetica

Applicazioni tipiche

- *Marittimo*
  Pompe di sentina, lavaggio ponti, raffreddamento motore, anti-incendio, lavaggio pesce.

- *Industriale ed agricole*
  Le pompe possono essere montata sulle prese diritte dei trattori o macchine per lavaggio, risciacquo ecc.

Caratteristiche techniche

Corpo:	Bronzo
Girante:	Neoprene o nitrile (F9B/F95B - neoprene)
Albero:	Acciaro resistente agli acidi. L' albero è montato su doppi cuscinetti a sfera permanentemente lubrificati
Guarnizione:	Guarnizione meccanica
Camma:	Piena o ridutta
Collegamento:	Vedi "Specifica del tipo", página 19
Frizione:	Elettromagnetica, 2xgola A o 1xgola B Tensione, corrente continua: 12 V (4 A) 24 V (2 A)

Dati di pressione e capacità

Vedi página 26-28.

Instruzioni per la manutenzione

Vedi elenco delle parti página 19-20, 21-25.

Smontaggio

1. Rimuovere il coperchio e la guarnizione.
2. Rimuovere la girante con due cacciavati.
3. Smontare la camma e pulire la stressa e il corpo pompa dalle rimanenze della guarnizione.
4. Smontare la piastra.
5. Smontare l' anello di fermo (pos 16) e la rondella (F7B/F95B - pos 29) che fissano la tenuta meccanica. Le pompe F8B/F9B sono prive della rondella.
6. Lubrificate la parte dell' albero davanti ai para-acqua per facilitare l'estrazione dei para-acqua. Fatto questo spingeteli verso il basso per l'estrazione.
7. Smontare le viti che fissano il corpo pompa al piedistallo sulle pompe F8B/F9B/F95B (pos 25). Rimuovere il dado (pos 33) sulla pompa tipo F7B. Smontare il corpo.
8. Smontare l'anello di ceramica.
9. Pulire l'albero, il corpo pompa, la camma e il coperchio. Lavare accuratamente tutta la pompa rimuovendo qualsiasi traccia di sporco.

Montaggio

1. Inumidire l'anello in ceramica co una miscela di acqua e sapone (5% sapone) e rimontarla nel corpo pompa. Cospargere la tenuta meccanica con del grasso formandone una guarnizione (protezione) che garantirà il buon funzionamento della parte.
2. Fissare il corpo pompa al piedistallo. Sulla F7B con il dado (pos 33) e sulle F8B/F9B/F95B con le viti (pos 25).
3. Inumidire l' anello di tenuta con acqua saponata e spingerlo sull' albero fino alla sua posizione.
4. Inserire la rondella F7B/F95B - pos 29) sull' albero. Le F8B/F9B sono prive della piastra (pos 29).
5. Montare la piastra nel corpo pompa.
6. Applicare la guarnizione tonda tra la camma e la vite camma. Fissare la camma.
7. Lubrificare con vaselina o similari la girante e applicarla nella sua con un movimento rotatio nella direzione di rotazione della stessa.

Packaging - Processing
Bid on Equipment
1-847-683-7720
www.bid-on-equipment.com

8. Lubrificare con vaselina o similari la parte superiore del corpo pompa dove viene applicata la guranizione del coperchio. Applicare la guarnizione e rimontare il coperchio.

Specifica del tipo

Pompe con girante in neoprene e camma intera

Tipo	Art No	Raccordo
F7B-5000	10-24116-99	BSP 1"
F7B-5007	10-24116-98	NPTF 1"-11½
F8B-5000-VF	10-13025-99	Flangatio*
F8B-5000-TSS	10-13176-99	Flangatio*
F9B-5600	10-13027-99	BSP 2"
F9B-5607	10-13027-98	NPTF 2"-11½
F9B-5600-TSS	10-13178-99	Flangatio**
F9B-5600-VF	10-13226-99	Flangatio**
F95B-5000	10-13143-99	BSP 2½""
F95B-5007	10-13143-98	NPTF 2½"-8

Queste pompe non includono la frizione elettromagnetica.
Altri tipi su richiesta.

* Kit adattore per F8B con boccole da BSP 1½" o NPTF 1½"-11½, vedi lista reicambi

** Kit adattore per F9B con boccole BSP 2" or NPTF 2"-11½, vedi lista reicambi

Frizione elettromagnetica

Voltaggio	Art No	Gola
12 V	05-32-1	2xA
24 V	05-32-2	2xA
12 V	05-32-3	1xB
24 V	05-32-4	1xB

Elenco delle parti

Pos	Nos	Descrizione	F7B-5000/-5007	F8B-5000-VF F8B-5000-TSS	F9B-5600/-5607 F9B-5600-TSS/VF	F95B-5000/-5007
1	1	Corpo	01-21862-3 [1]	01-11206	01-11358-1 [3]	01-13119-2
	1	Corpo	01-21862-5 [2]	-	01-11358-2 [4]	-
	1	Corpo-TSS	-	01-13002-1	01-13003	-
	1	Corpo-VF	-	-	01-13224-1 [5]	
2	1	Coperchio	01-42441	01-42422-1	01-42422-1	01-35284-2
3	1	Albero	01-35084	01-35138	01-35138	01-35700
4	1	Camma 1/1	01-42679	01-42680	01-43137	01-35744
	1	Camma 2/3	01-42442	01-42425	01-43135	01-35854
	1	Camma 1/2	-	01-42755	01-43138	01-35853
5	1	Girante	09-1028B (neoprene)	09-819B (neoprene)	-	09-820B (neoprene)
	1	Girante	09-1028B-9 (nitrile)	09-819B-9 (nitrile)	-	-
	1	Girante	-	-	09-814B (neoprene)	-
6	1	Guarnizioni	01-42445	01-42424	01-42424 [6]	-
		Guarnizioni coperchio	-	-	0.2172.142 [7]	0.2172.142
7	1	Spina	01-42400	01-42426	01-42426	01-42426
8	1	Piastra	01-42443	01-42423	01-42423	01-42423

Packaging - Processing
Bid on Equipment
1-847-683-7720
www.bid-on-equipment.com

Pos	Nos	Descrizione	F7B-5000/-5007	F8B-5000/-5007 F8B-5000-TSS	F9B-5600/-5607 F9B-5600-TSS/VF	F95B-5000/-5007
9	1	Piedistallo	01-24098	01-13020	01-13020	01-13131-1
10	1	Spessore	01-45170	01-42747	01-42747	-
11	1	Anello di connessione	-	01-35144-2	01-35144-2	-
12	1	V-ring	0.2230.015	0.2230.319	0.2230.319	0.2230.322
13	1	Guarnizione meccanica	09-20-115	09-20-118	09-20-118	09-20-534
14	2	Cuscinetto	0.3431.778	0.3431.780	0.3431.780	se pos 39, 40
15	1	Anello di fermo	0.0371.047	0.0371.062	0.0371.062	0.0371.080
16		Anello di fermo	0.0370.516 (1 pc)	0.0370.525 (2 pcs)	0.0370.525 (2 pcs)	0.0370.535 (1 pc)
17	1	Puleggia				
		12 V, 2xA-Profil	0.3454.001	0.3454.001	0.3454.001	0.3454.001
		24 V, 2xA-Profil	0.3454.002	0.3454.002	0.3454.002	0.3454.002
		12 V, 1xB-Profil	0.3454.003	0.3454.003	0.3454.003	0.3454.003
		24 V, 1xB-Profil	0.3454.004	0.3454.004	0.3454.004	0.3454.004
18	1	Chiavella	0.0502.001	0.0502.001	0.0502.001	0.0502.001
19		Rondella	0.0353.309 (1 pc)	0.0353.309 (5 pcs)	0.0353.309 (5 pcs)	0.0353.309 (1 pc)
20	1	Rondella	01-46789-06	01-46789-06	01-46789-06	01-46789-06
21	1	Vite	0.0141.918	0.0141.918	0.0141.918	0.0141.918
22	3	Vite	-	0.0300.565	0.0300.565	-
23	3	Rondella	-	0.0353.402	0.0353.402	0.0353.402
24	3	Vite	0.0141.903	0.0141.903	0.0141.903	0.0141.903
25	4	Vite	-	0.0144.002	0.0144.002	0.0141.922
26	2	Presa	0.2500.805	0.2500.805	0.2500.805	-
27	1	Vite camma 1/1	01-46794-01	01-46794-02	01-46794-02	01-46794-09 (2 pcs)
	1	Vite camma 2/3	01-46794-07	01-46794-02	01-46794-02	01-46794-11
	1	Vite camma 1/2	-	01-46794-08	01-46794-08	01-46794-11
28		Vite	01-46794-05 (6 pcs)	0.0144.200 (5 pcs)	0.0144.200 (5 pcs)	0.0138.134 (5 pcs)
29	1	Rondella	01-45174	-	-	01-46323
31	1	Vite	0.0144.001	-	-	-
32	1	Rondella	0.0353.402	-	-	0.0353.111
33	1	Dado	0.0194.001	-	-	-
34	1	Anello di fermo	0.0370.017	-	-	-
35	1	Rondella	01-45191	-	-	01-46322
36	2	Filetto	-	-	-	01-24426-1 8)
	2	Filetto	-	-	-	01-24426-2 9)
37	2	Guarnizioni coperchio	-	-	-	01-46319
38	1	Vite	-	-	-	0.0141.917
39	1	Cuscinetto	-	-	-	0.3431.743
40	1	Cuscinetto	-	-	-	0.3431.043
41	1	Adattatore rettangolare	-	09-43112 (BSP)	09-46557-01 (BSP)	-
	1	Adattatore rettangolare	-	09-45562 (NPTF)	09-46557-02 (NPTF)	-
*	1	Kit di servizio	09-45590 (neoprene)	09-45579 (neoprene)	-	09-46371 (neoprene)
		Kit di servizio	09-45591 (nitrile)	09-45580 (nitrile)	09-45582 (neoprene)	
**	1	Kit de assemblaggio per frizione	09-46436	09-46437	09-46437	09-46437

**) pos 5, 6, 13, 28 **) pos 18, 19, 20, 21, 24, 35/32*

1) BSP 1" – pompe 10-24116-99 2) NPTF 1"-11½ – pompe 10-24116-98 3) BSP 2" – pompe 10-13027-99

4) NPTF 2"-11½ – pompe 10-13027-98 5) Flangatio – pompe 10-13226-99 6) Pompe 10-13027/13178-99

7) Pompe 10-13226-99 8) BSP 2½" - pompe 10-13143-99 9) NPTF 2½"-8 – pompe 10-13143-98

Packaging - Processing
Bid on Equipment
1-847-683-7720
www.bid-on-equipment.com

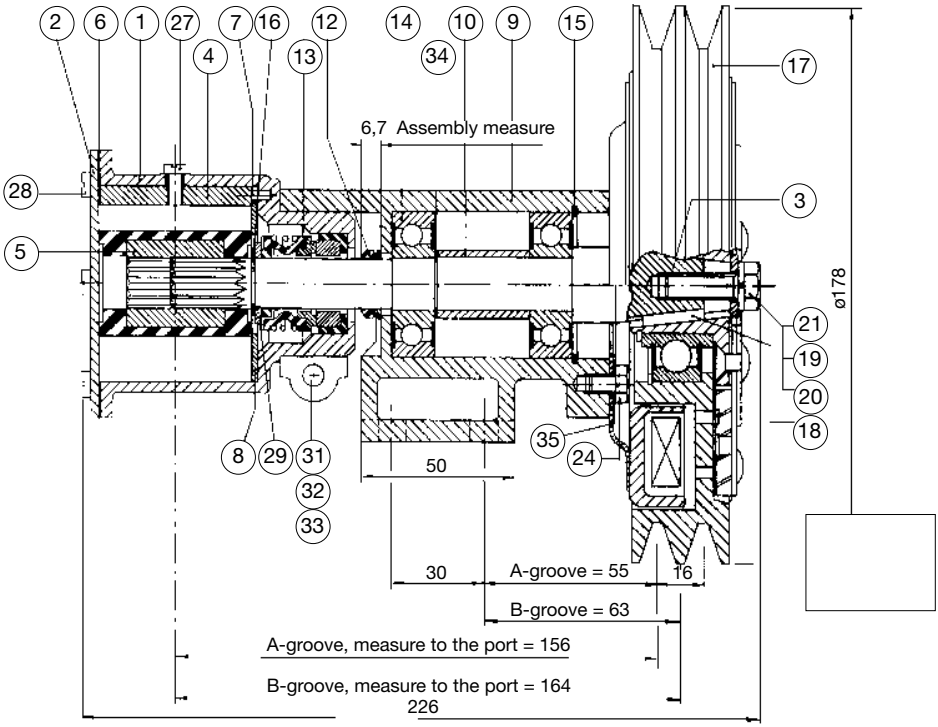

Dimensions in mm

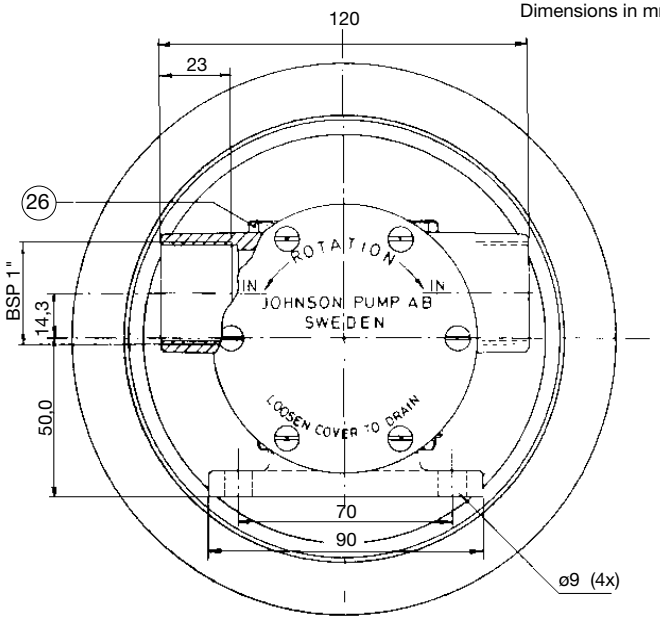

Packaging - Processing
Bid on Equipment
1-847-683-7720
www.bid-on-equipment.com

F8B-5000-VF
F9B-5600-VF

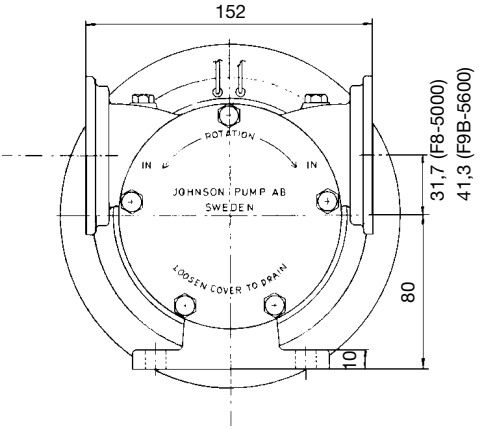

F9B-5600

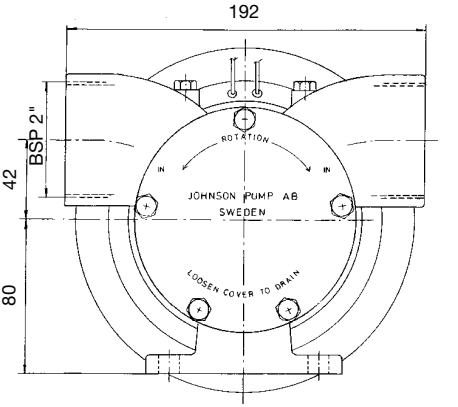

F8B-5000-VF
F8B-5000-TSS

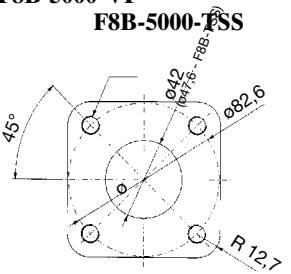

F9B-5600-VF
F9B-5600-TSS

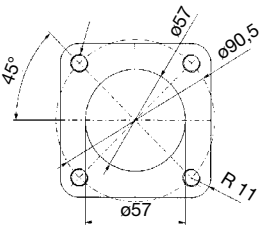

F8B-5000-TSS
F9B-5600-TSS

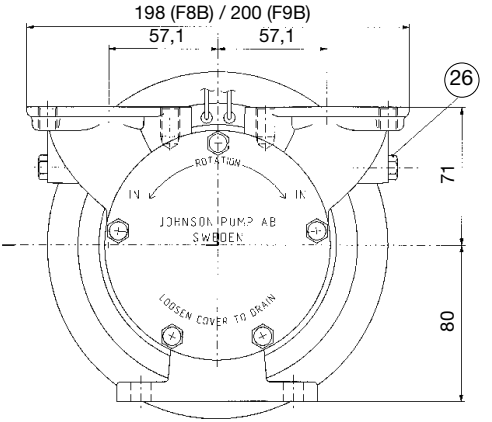

F8B-5000-VF/-TSS
F9B-5600-VF/-TSS

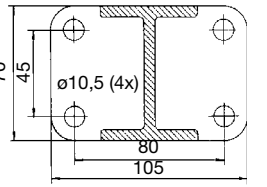

Packaging - Processing
Bid on Equipment
1-847-683-7720
www.bid-on-equipment.com

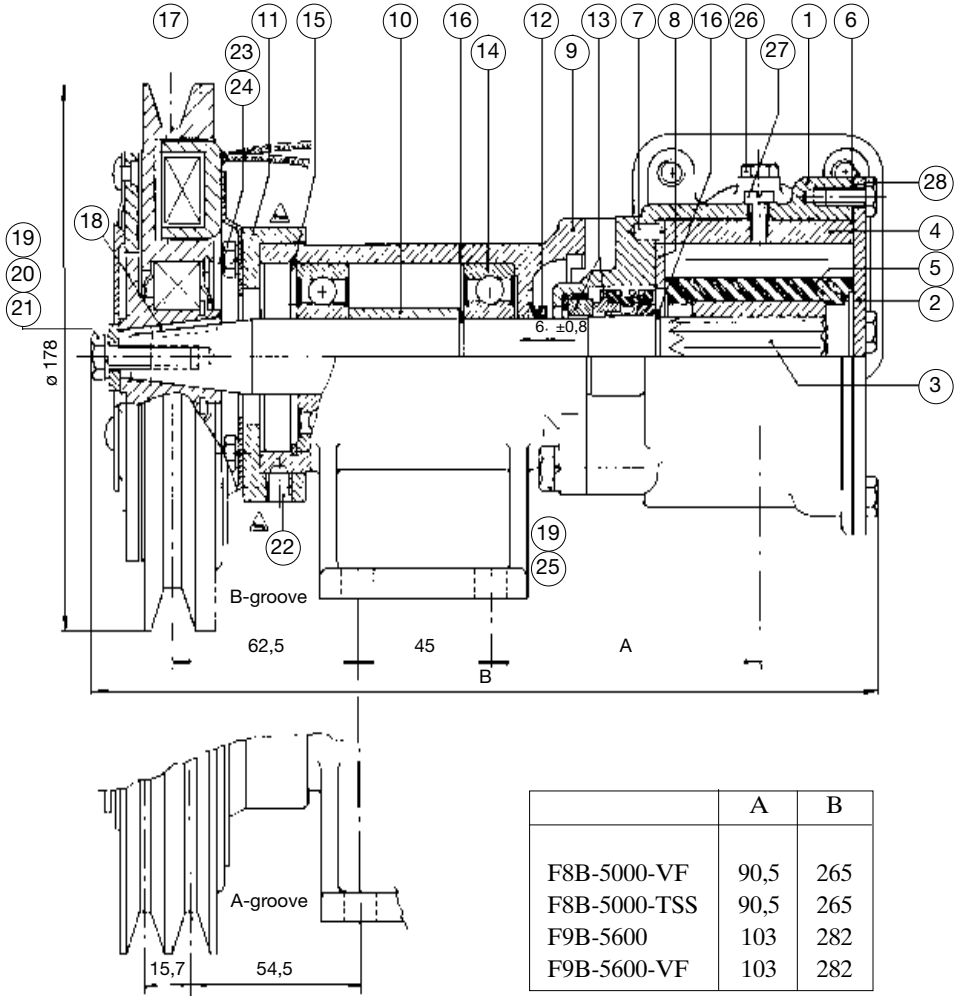

	A	B
F8B-5000-VF	90,5	265
F8B-5000-TSS	90,5	265
F9B-5600	103	282
F9B-5600-VF	103	282

Packaging - Processing
Bid on Equipment
1-847-683-7720
www.bid-on-equipment.com

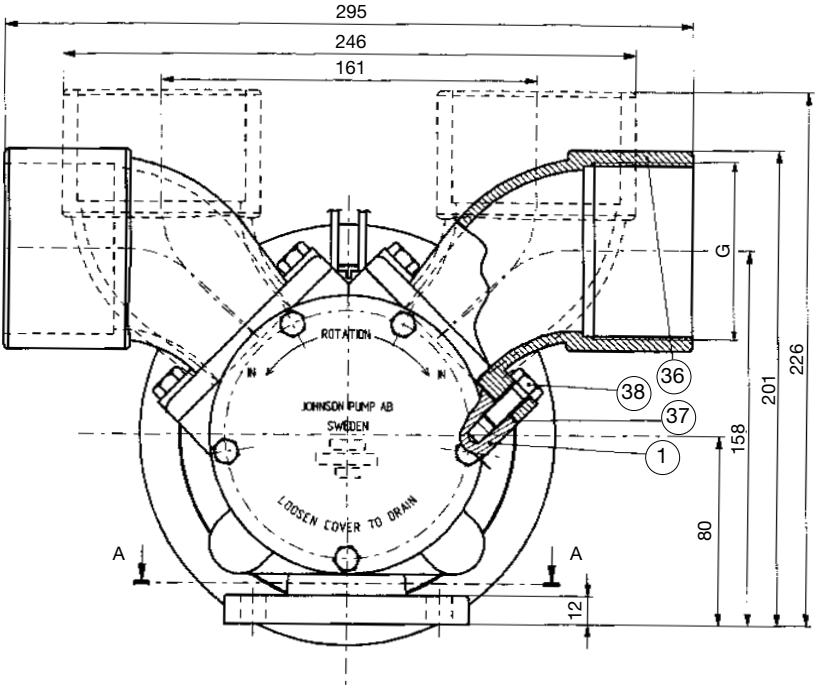

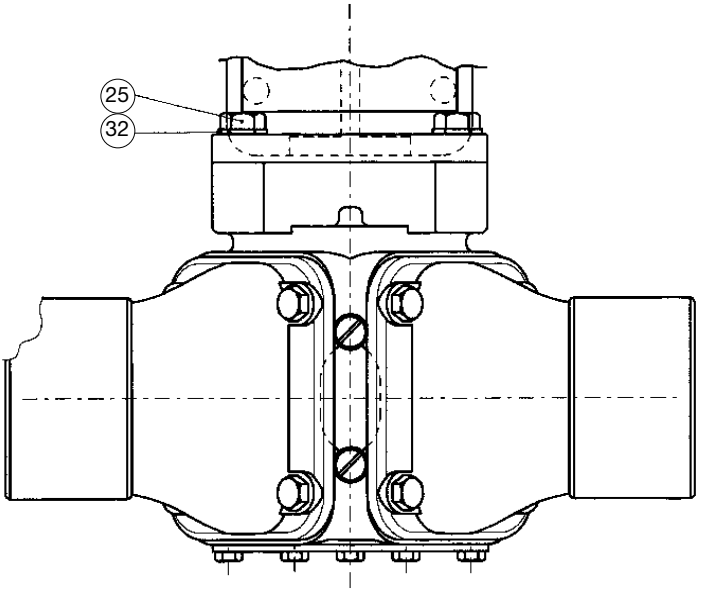

Packaging - Processing
Bid on Equipment
1-847-683-7720
www.bid-on-equipment.com

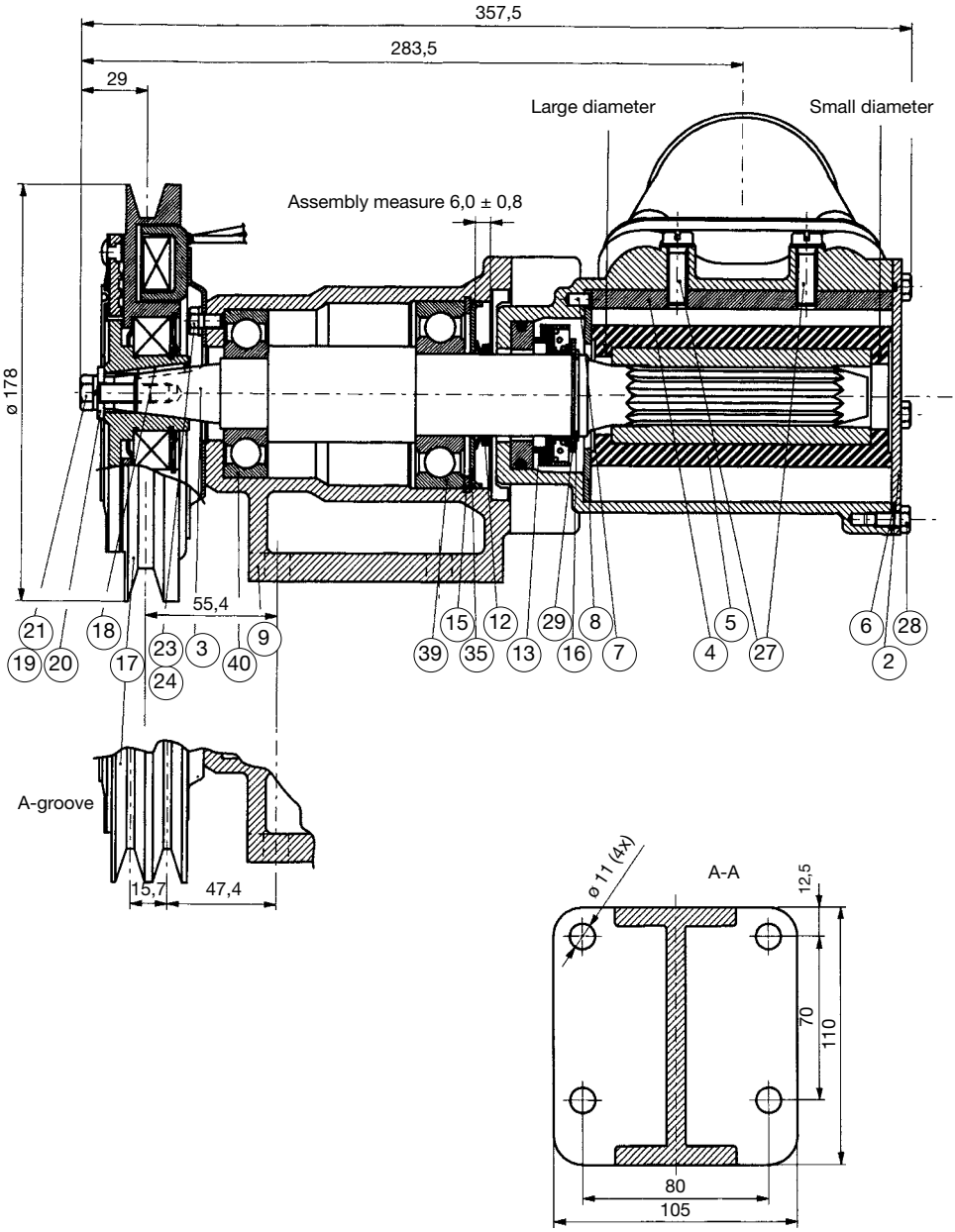

Tryck- och kapacitetsdata
(baserad på vatten vid 20°C, helkam och neoprenimpeller)

Pressions et débits
(eau à 20°C, came hauteur maxi et rotor néoprène)

Pressure and capacity data
(based on water at 20°C/68°F, full cam and impeller neoprene)

Caudales y presiones
(con agua a 20°C, leva entera y impulsor de neopreno)

Druck und Leistungsdaten
(basierend auf Wasser bei 20°C, 1/1 Kamm und Neoprenmpeller)

Dati di pressione e capacità
(per acqua a 20°C, camma intera e girante in neoprene)

F7B-5000

			700 rpm			900 rpm			1400 rpm			1750 rpm			2000 rpm		
	Bar			kPa		ft	kW	l/min	USGPM	kW	l/min	USGPM	kW	l/min	USGPM	kW	l/minUSGPM
kW	l/min	USGPM															
0,3	30	10,1	0,37	36,0	9,5	0,37	46,0	12,2	0,75	74,0	19,6	0,75	98,0	26,0	0,75	107,0	28,3
0,6	60	20,1	0,37	34,0	9,0	0,37	44,0	11,6	0,75	72,0	19,0	0,75	96,0	25,4	0,75	104,0	27,5
1,0	100	33,5	0,37	29,0	7,7	0,37	40,0	10,6	0,75	67,0	17,7	0,75	87,0	23,0	0,75	98,0	25,9
1,8	180	60,4	0,37	21,0	5,5	0,37	30,0	7,9	0,75	57,0	15,1	0,75	73,0	19,3	0,75	84,0	22,2
2,5	250	83,8	-	-	-	-	-	-	0,75	37,0	9,8	0,75	52,0	13,7	1,1	63,0	16,6

F8B-5000/F8B-5000 TSS

			700 rpm			900 rpm			1400 rpm			1750 rpm			2000 rpm		
	Bar			kPa		ft	kW	l/min	USGPM	kW	l/min	USGPM	kW	l/min	USGPM	kW	l/minUSGPM
kW	l/min	USGPM															
0,3	30	10,1	0,37	87,0	23,0	0,75	114,0	30,1	1,1	188,0	50,0	1,5	241,0	63,7	1,5	279,0	73,7
0,6	60	20,1	0,55	80,0	21,1	0,75	107,0	28,3	1,1	180,0	47,6	1,5	233,0	61,6	1,5	270,0	71,3
1,0	100	33,5	0,55	73,0	19,3	0,75	101,0	26,7	1,1	177,0	46,8	1,5	228,0	60,2	1,5	264,0	69,7
1,8	180	60,4	-	-	-	1,1	70,0	18,5	1,1	148,0	39,1	2,2	203,0	53,6	2,2	242,0	63,9
2,5	250	83,8	-	-	-	-	-	-	1,1	108,0	28,5	2,2	166,0	43,9	2,2	208,0	55,0

Reducerad kam - 30-45% lägre kapacitet.
Nitrilimpeller - ca 30% lägre tryck.
Reduced cam - 30-45% lower capacity.
Impeller of nitrile - adjust total head approx. 30% down.
Mit reduziertem Kamm verringert sich die Leistung um 30-45%.
Mit Nitrilimpellers verrignert sich die Leistung um ca. 30%.

Came réduite - débit inférieur d'environ 30-45%.
Rotor en nitrile - hauteur de refoulement environ 30% inférieure.
Leva reducida - Reduce caudal 30-45%.
Impulsor de nitrilo - reduce la presión aproximadamente el 30%.
Camma ridotta - capacità inferiore del 30-45%.
Girante in nitrile - la prevalenza totale è inferiore del 30% circa.

Packaging - Processing
Bid on Equipment
1-847-683-7720
www.bid-on-equipment.com

Tryck- och kapacitetsdata
(baserad på vatten vid 20°C, helkam och neoprenimpeller)

Pressions et débits
(eau à 20°C, came hauteur maxi et rotor néoprène)

Pressure and capacity data
(based on water at 20°C/68°F, full cam and impeller neoprene)

Caudales y presiones
(con agua a 20°C, leva entera y impulsor de neopreno)

Druck und Leistungsdaten
(basierend auf Wasser bei 20°C, 1/1 Kamm und Neoprenmpeller)

Dati di pressione e capacità
(per acqua a 20°C, camma intera e girante in neoprene)

F9B-5000/F9B-5000 TSS

			700 rpm			900 rpm			1400 rpm			1750 rpm			2000 rpm		
	Bar			kPa		ft	kW	l/min	USGPM	kW	l/min	USGPM	kW	l/min	USGPM	kW	l/min
kW	l/min	USGPM															USGPM
0,3	30	10,1	0,75	129,0	34,1	0,75	170,0	44,9	1,5	268,0	70,8	1,5	331,0	87,5	2,2	388,8	102,7
0,6	60	20,1	0,75	124,0	32,8	0,75	161,0	42,5	1,5	260,0	68,9	2,2	323,0	85,3	2,2	383,1	101,2
1,0	100	33,5	0,75	118,8	31,4	1,1	156,0	41,2	1,5	255,6	67,5	2,2	315,2	83,3	3,0	379,2	100,2
1,8	180	60,4	1,1	105,0	27,7	1,1	140,0	37,0	1,5	235,0	62,1	2,2	286,1	75,6	3,0	351,3	92,8
2,5	250	83,8	1,1	83,7	22,1	1,5	102,0	26,9	2,2	208,8	55,2	3,0	266,0	70,3	3,0	304,1	80,3

F9B-5600

			700 rpm			900 rpm			1400 rpm			1750 rpm			2000 rpm		
	Bar			kPa		ft	kW	l/min	USGPM	kW	l/min	USGPM	kW	l/min	USGPM	kW	l/min
kW	l/min	USGPM															USGPM
0,3	30	10,1	0,75	129,0	34,1	1,1	170,0	44,9	1,5	270,0	71,3	1,5	331,0	87,5	2,2	376,0	99,3
0,6	60	20,1	0,75	126,0	33,8	1,1	165,0	43,6	1,5	266,0	70,3	2,2	323,0	85,3	2,2	368,0	97,2
1,0	100	33,5	0,75	123,0	32,5	1,1	161,1	42,6	2,2	260,0	68,7	2,2	314,0	83,0	3,0	361,0	95,4
1,8	180	60,4	0,75	110,0	29,1	1,5	153,0	40,4	2,2	242,0	63,9	2,2	291,0	76,9	3,0	340,0	89,8
2,5	250	83,8	1,1	90,0	23,8	1,5	130,0	34,3	2,2	218,0	57,6	3,0	269,0	71,1	3,0	312,0	82,4
3,0	300	100,6	1,5	61,0	16,1	2,2	102,0	26,9	3,0	190,0	50,2	3,0	242,0	63,9	3,5	284,0	75,0
3,5	350	117,4	-	-	-	-	-	-	3,0	160,0	42,3	3,5	205,0	54,2	3,5	235,0	62,1

Reducerad kam - 30-45% lägre kapacitet.
Reduced cam - 30-45% lower capacity.
Mit reduziertem Kamm verringert sich die Leistung um 30-45%.

Came réduite - débit inférieur d'environ 30-45%.
Leva reducida - Reduce caudal 30-45%..
Camma ridotta - capacità inferiore del 30-45%.
.

Packaging - Processing
Bid on Equipment
1-847-683-7720
www.bid-on-equipment.com

Tryck- och kapacitetsdata
(baserad på vatten vid 20°C, helkam och neoprenimpeller)

Pressions et débits
(eau à 20°C, came hauteur maxi et rotor néoprène)

Pressure and capacity data
(based on water at 20°C/68°F, full cam and impeller neoprene)

Caudales y presiones
(con agua a 20°C, leva entera y impulsor de neopreno)

Druck und Leistungsdaten
(basierend auf Wasser bei 20°C, 1/1 Kamm und Neoprenmpeller)

Dati di pressione e capacità
(per acqua a 20°C, camma intera e girante in neoprene)

F95B-5000

			700 rpm			900 rpm			1400 rpm			1750 rpm			2000 rpm		
	Bar			kPa		ft	kW	l/min	USGPM	kW	l/min	USGPM	kW	l/min	USGPM	kW	l/min
kW	l/min	USGPM															
0,5	30	10,1	0,75	185,1	48,9	1,1	240,3	63,5	1,5	385,2	101,8	2,2	484,2	127,9	3,0	535,2	141,4
0,6	60	20,1	1,1	180,0	47,6	1,1	234,9	62,1	1,5	380,6	100,6	3,0	480,1	126,9	3,0	531,6	140,4
1,0	100	33,5	1,1	172,7	45,6	1,5	231,3	61,1	2,2	372,0	98,3	3,0	472,9	124,9	3,5	521,0	137,6
1,8	180	60,4	1,1	141,2	37,3	1,5	198,1	52,3	3,0	330,6	87,4	3,5	423,6	111,9	3,5	473,1	125,0
2,5	250	83,8	1,5	79,5	21,0	2,2	137,8	36,4	3,0	267,6	70,7	4,0	361,3	95,5	5,5	407,3	107,6

			2500 rpm		
Bar			kPa		ft
USGPM					
0,5	30	10,1	0,75	185,1	48,9
0,6	60	20,1	1,1	180,0	47,6
1,0	100	33,5	1,1	172,7	45,6
1,8	180	60,4	1,1	141,2	37,3
2,5	250	83,8	1,5	79,5	21,0

kW l/min

Reducerad kam - 30-45% lägre kapacitet.
Reduced cam - 30-45% lower capacity.
Mit reduziertem Kamm verringert sich die Leistung um 30-45%.

Came réduite - débit inférieur d'environ 30-45%.
Rotor en nitrile - hauteur de refoulement environ 30% inférieure.
Leva reducida - Reduce caudal 30-45%.
Impulsor de nitrilo - reduce la presión aproximadamente el 30%.
Camma ridotta - capacità inferiore del 30-45%.
Girante in nitrile - la prevalenza totale è inferiore del 30% circa.

Packaging - Processing
Bid on Equipment
1-847-683-7720
www.bid-on-equipment.com

Packaging - Processing
Bid on Equipment
1-847-683-7720
www.bid-on-equipment.com

Tillbehör

Vakuumbrytare 09-45053

- För automatisk avstängning.
- För att förhindra skada på pumpen.

Vakuumbrytaren passar alla självsugande impellerpumpar och ska användas vid t ex länsning/tömning av tank för att förhindra torrkörning.

Vakuumbrytaren stänger automatiskt av pumpen när kölsvinet/tanken är tömd. Med en vakuumbrytare installerad kan pumpen startas antingen genom fjärrstyrning eller manuellt genom att trycka på knappen på vakuumbrytaren.

Kopplingsschema, se sid 31.

Accessories

Vacuum switch 09-45053

- For automatic shut off operation.
- To prevent pump damage.

The vacuum switch works with all self-priming impeller pumps and should be used for e.g. bilge pumping/emptying of tanks to prevent the pump from running dry.

The vacuum switch automatically shuts the pump off when the bilge/tank is dry. With the switch fitted, you can start the pump by remote push button or manually by depressing lever on the switch.

Wiring diagram, see page 31.

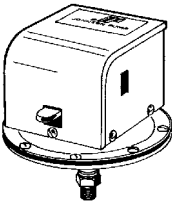

Motflänsset för TSS

- 09-43112
  F8B-5000-TSS, BSP 1 1/2"
- 09-46557-01
  F9B-5600-TSS, BSP 2"

Port adaptor kit for TSS

- 09-43112
  F8B-5000-TSS, BSP 1 1/2"
- 09-46557-01
  F9B-5600-TSS, BSP 2"

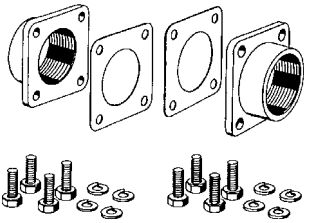

Packaging - Processing
Bid on Equipment
1-847-683-7720
www.bid-on-equipment.com

Zubehör

Vakuumschalter 09-45053

- Zum automatischen Abschalten der Pumpe.
- Zum Schutz der Pumpe vor Beschädigungen.

Der Vakuumschalter kann bei allen selbstansaugenden Impellerpumpen eingesetzt werden. Z.B. bei Bilge- oder Tankentleerungspumpen dient der Schalter zum Schutz der Pumpe vor Trockenlauf.

Der Vakuumschalter schaltet die Pumpe ab, wenn die Bilge oder der Tank leer ist. Mit dem am Vakuumschalter befindlichen Schalter kann die Pumpe entwerder durch Drücken des Druckschalters oder des Hebels wieder gestartet werden.

Schaltplan, Siehe Seite 31.

Accessoires

Contacteur à dépression 09-45053

- Pour arrêt automatique de la pompe.
- Pour éviter d'endommager la pompe.

Le contacteur à dépression fonctionne sur toutes les pompes auto-amorçantes à rotor et devrait par exemple être utilisé pour le pompage de cales ou la vidange de réservoirs afin d'éviter à la pompe de fonctionner à sec.

Le contacteur à dépression arrête automatiquement la pompe quand la cale ou le réservoir est sec. Avec le contacteur à dépression, il est possible de commander la pompe à distance ou en appuyant sur le levier de l'interrupteur.

Schéma de câblage, voir page 31.

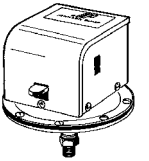

Accesorios

Interruptor automático 09-45053

- Para desconexión automática.
- Para evitar averias de la bomba.

El interruptor de vacio puede conectarse a todas las bombas autocebantes y debe utilizarse en las bombas de achique o de trasiego para evitar que trabajen en seco.

El interruptor de vacio desconecta automáticamente la bomba, cuando el depósito está vacio. Cuando se instala este interruptor, podrá conectarse la bomba con un pulsador a distancia o presionado la palanca del interruptor de vacio.

Esquema de instalación, ver página 31.

Accessori

Interruttore di vuoto 09-45053

- Per il disinserimento automatico della pompa.
- Per impedire cha la pompa venga danneggiata.

L'interruttore di vuoto funziona con tutte le pompe a girante autodescanti e deve essere utilizzato, ad esempio, per lo svuotamento della sentina o di serbatoi, per evitare cha la pompa funzioni a secco.

L'interruttore di vuoto disinserisce automaticamente la pompa quando la sentina o il serbatoio sono asciutti. Con l'interruttore installato è possibile avviare la pompa a distanza, mediante il pulsante apposito, oppure manualmente, azionando la leva che si trova sull'interruttore.

Schema dei collegamenti elettrici, vedi pagina 31.

Packaging - Processing
Bid on Equipment
1-847-683-7720
www.bid-on-equipment.com

Anschlußsatz - TSS

- 09-43112
  F8B-5000-TSS, BSP 1 1/2"
- 09-46557-01
  F9B-5600-TSS, BSP 2"

Kit de contrebrides - TSS

- 09-43112
  F8B-5000-TSS, BSP 1 1/2"
- 09-46557-01
  F9B-5600-TSS, BSP 2"

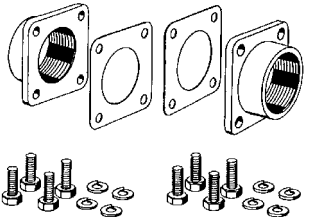

Juego de bridas - TSS

- 09-43112
  F8B-5000-TSS, BSP 1 1/2"
- 09-46557-01
  F9B-5600-TSS, BSP 2"

Kit di adattamento - TSS

- 09-43112
  F8B-5000-TSS, BSP 1 1/2"
- 09-46557-01
  F9B-5600-TSS, BSP 2"

Kopplingsschema
Wiring diagram
Schaltplan

Schéma de câblage
Esquema de instalación
Schema dei collegamenti

Kontrollampa
Indicator light
Kontrolleuchte
Voyamt lumineux
Piloto
Spia luminosa

Startknapp
Push buttont
Druckschalter
Bouton-poussoir
Pulsadór
Pulsante

Styrhytt
Wheel house
Ruderhaus

Timonière
Cabina
Timoneria

Motorrum
Engine room
Maschinenraum

Salle des machines
Sala de maquinas
Sala motori

Elektromagnetisk koppling
Magnetic clutch
Magnetkupplung
Embrayage magnétique
Embrague electromagnético
Frizione elettromagnetica

Vakuumbrytare
Vacuum switch
Sicherung
Fusible
Fusible
Fusibile

Säkring
Fuse
Sicherung
Fusible
Fusible
Fusibile