SEGATRICE A NASTRO
BAND-SAW MACHINE
BANDSÄGEMASCHINE
SCIE A RUBAN
SIERRA DE CINTA
SERRA DE FITA

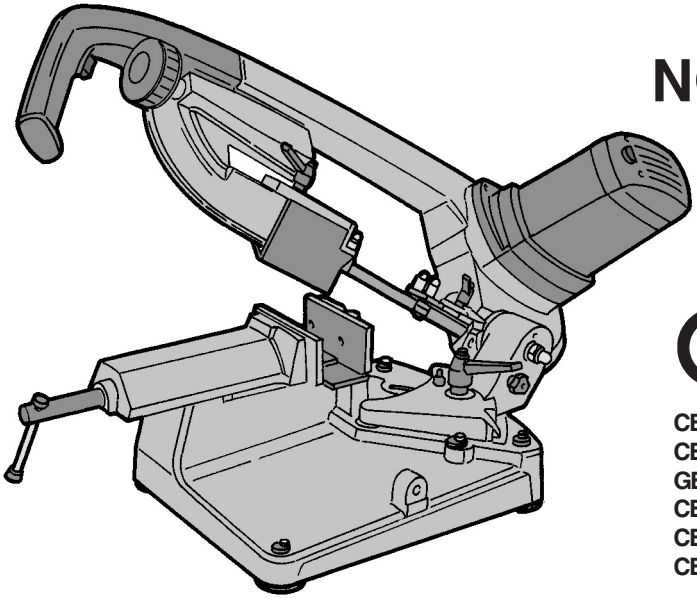

Art.
NG 120

CE

CERTIFICATA
CERTIFIED
GEPRÜFT
CERTIFIE
CERTIFICADA
CERTIFICADA

ISTRUZIONI PER L'USO E MANUTENZIONE
INSTRUCTIONS FOR USE AND MAINTENANCE
GEBRAUCHSANLEITUNGEN UND WARTUNG
MODE D'EMPLOI ET ENTRETIEN
INSTRUCCIONES PARA EL USO Y MANUTENCION
INSTRUÇÕES DE UTILIZAÇÃO

femi®

www.femi.it

Packaging - Processing
Bid on Equipment
1-847-683-7720
www.bid-on-equipment.com

Packaging - Processing
Bid on Equipment
1-847-683-7720
www.bid-on-equipment.com

DICHIARAZIONE DI CONFORMITÁ CE
DEL COSTRUTTORE **FEMI S.p.A.**
Via del Lavoro, 4 - 40023 Castel Guelfo (BO) - ITALIA
Tel. +39-0542-670160 - Fax +39-0542-670185 -
http://www.femi.it
Dichiara che la: **SEGATRICE A NASTRO NG120**
è conforme alle disposizioni contenute nelle Direttive:
CEE 98/37 - 89/336 - 73/23

COMPLIANCE DECLARATION CE
OF THE BUILDER **FEMI S.p.A.**
Via del Lavoro, 4 - 40023 Castel Guelfo (BO) - ITALIA
Tel. +39-0542-670160 - Fax +39-0542-670185 -
http://www.femi.it
Declare the: **BAND-SAW MACHINE NG120**
is in compliance with the rules contents in the Directives:
EEC 98/37 - 89/336 - 73/23

CE KONFORMITATS ERKLARUNG
DES HERSTELLER FEMI S.p.A.
Via del Lavoro, 4 - 40023 Castel Guelfo (BO) - ITALIA
Tel. +39-0542-670160 - Fax +39-0542-670185
http://www.femi.it
Erklart dass: **BANDSÄGEMASCHINE NG120**
ist konform mit der Direktiven:
EWG 98/37 - 89/336 - 73/23

DECLARATION DE CONFORMITE CE
DU CONSTRUCTEUR **FEMI S.p.A.**
Via del Lavoro, 4 - 40023 Castel Guelfo (BO) - ITALIA
Tel. +39-0542-670160 - Fax +39-0542-670185
http://www.femi.it
Declare que la: **SCIE A RUBAN NG120**
est conforme aux disposition contenues dans les
Directives:
CEE 98/37 - 89/336 - 73/23

DECLARATION DE CONFORMIDAD CE
DEL CONSTRUCTOR **FEMI S.p.A.**
Via del Lavoro, 4 - 40023 Castel Guelfo (BO) - ITALIA
Tel. +39-0542-670160 - Fax +39-0542-670185
http://www.femi.it
Declara que la: **SIERRA DE CINTA NG120**
esta conforme a las disposiciones contenide en la
Directivas:
CEE 98/37 - 89/336 - 73/23

DECLARAÇÃO DE CONFORMIDADE CE
DO CONSTRUTTORE **FEMI S.p.A.**
Via del Lavoro, 4 - 40023 Castel Guelfo (BO) - ITALIA
Tel. +39-0542-670160 - Fax +39-0542-670185
http://www.femi.it
Declara que a: **SERRA DE FITA NG120**
suivindo as regras exigidas no contendo da Directivas:
CEE 98/37 - 89/336 - 73/23

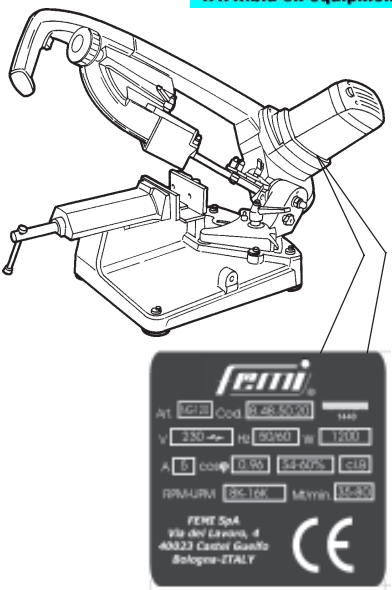

INGOMBRO PER ETICHETTA

CE

FEMI S.P.A.
Il Direttore Generale
Maurizio Casanova

ITALIANO (IT) ..... **1 ÷ 6**
ENGLISH (EN) ..... **7 ÷ 12**
DEUTSCH (DE) ..... **13 ÷ 18**
FRANCAIS (FR) ..... **19 ÷ 24**
ESPANOL (ES) ..... **25 ÷ 30**
PORTUGUÊS (PT) ..... **31÷ 36**

1 INTRODUCTION TO USE 7

2 INSTALLATION 8

3 ADJUSTMENT 9

4 USE 10

5 ACCESSORIES 11

6 MAINTENANCE 11

7 TROUBLESHOOTING 12

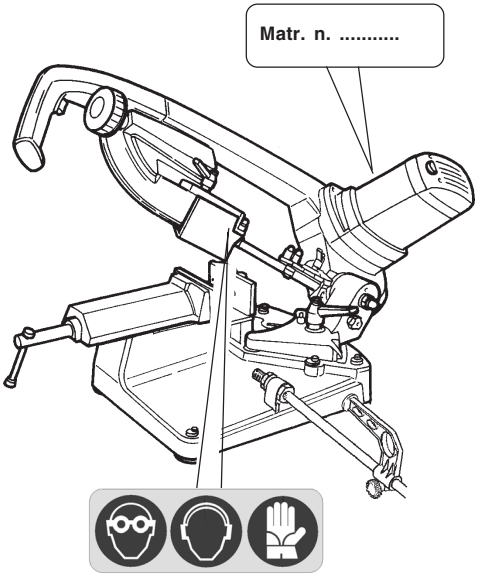

1 INTRODUCTION TO USE

Before starting work with your sawing machine, carefully read this instructions manual so that you are familiar with the machine and its uses and where it should not be used. Keep this manual in a safe place.
It is an integral part of the machine and should be used for reference in operating the machine correctly and in the proper safety conditions.
Use the machine only and exclusively for the uses specified below, as recommended in this manual. The machine should not in any way be tampered with, or forced, or used for unsuitable purposes.

1.1 SYMBOLS PLACED IN CORRESPONDANCE WITH USAGE POINTS

Never underestimate the warnings “ATTENTION - CAUTION” given in this manual.
In order to draw the user’s attention and to preserve safety, hazardous operation are preceded by symbols and notes that point out the danger and explain how to behave to avoid any risk.
These symbols and notes are divided in three categories, identified by the following words:

ATTENTION: dangerous-behaviours that could cause serious injuries.

CAUTION: behaviours that could cause slight injuries or damages to things.

NOTE: the notes preceded by this symbols are technical and are aimed at making operations easier.

1.2 SAFETY AND RULES

The machine was designed and built according to the Community Directives in force: **EEC 98/37 - EEC 91/368 - EEC 93/68 - EEC 73/23 - EEC 89/336.**
The enclosed CE Declaration of conformity, togheter with the CE mark on product, essentially comprise and are an integral part of the machine : both guarantee product conformity with the aforesaid safety Directives.

1.3 RECOMMENDED AND NOT RECOMMENDED USAGE

This belt sawing machine was designed and constructed according to the most advanced technologies and may be used for all cutting requirements for metals commonly used in industry and artisanship.

It can cut:
- COMMON STEELS (FE 37...)
- SPECIAL STEELS (C 40, 18NiCrMo5...)
- ALUMINIUM AND ITS ALLOYS
- BRASS
- BRONZE
- STEEL TUBING (FE 35, FE 52...)
- PROFILED SECTIONS IN SHEET METAL AND ALUMINIUM

It is not suitable for cutting:
- WOOD AND SIMILAR MATERIALS
- BONE AND SIMILAR MATERIALS

ATTENTION: The band saw has been developed and manufactured to cut in dry condition; the use of any cooler by lubricating oil makes the machine unusable.

Consult the relative sections for cutting capacities, the speeds to use and the type of tools for use according to the material to be cut and its section. (See list of contents).

EN

Packaging - Processing
Bid on Equipment
1-847-683-7720
www.bid-on-equipment.com

EN

1.4 STANDARD SAFETY PROCEDURS

- Do not use the machine in very damp places or in the presence of inflammable liquids or gases.
- Do not use it in the open air when general weather and environmental conditions are unfavourable (eg. explosive atmospheres, during a storm or rain).
- Wear suitable clothes, without wide sleeves or articles such as scarves, chains and bracelets which could get caught in the moving parts.
- Always use personal protection devices: protective goggles as recommended by safety standards, gloves of the right size, headphones or earplugs, and hairnets if necessary.
- Use the tools recommended in this manual if you want to achieve the best performance from your sawing machine.
- Any power cable extensions must be type approved and comply with safety standards.
- Avoid using the machine if your psycho-physical condition are precarious or upset.

1.5 SAFETY PROCEDURS FOR FURTHER RISK

- Always keep processing residues away from the cutting area.
- Always use the clamp. The parts to be cut must always be held firmly in the clamp.
- Always keep hands away from the working areas while the machine is moving: before loading or unloading the part, release the run button on the hand grip.
- Do not force the machine unnecessarily : excessive cutting pressure could cause rapid wear to the blade and negatively influence the performance of the machine in terms of finishes and cutting precision.

1.6 NOISE CONDITIONS

In normal conditions of use as described in this manual, this belt sawing machine determines an equivalent level of acoustic pressure:
Leq = 82 dB(A) when operating unloaded;
Leq = 84,3 dB(A) during processing (eg. cutting of a steel tube Ø 80 mm thickness 5 mm), at cutting speed of 80 m/min., with a weighted operating cycle of 1 minute.
The frequency root mean RMS weighed for hand-arm acceleration does not exceed 2.5m/s².
Measurement were obteined in compliance with UNI 7712, ISO 3740, ISO 3746 and CEE 89/392 regulation.

☛ **NOTE: Personal hearing protection should be used, such as headphones or earplugs.**

1.7 INFORMATION ABOUT THE ELECTROMAGNETIC COMPATIBILITY

The European regulations on safety and, in particular, the EEC Directive 89/336 contemplate that all the equipment be equipped with shielding devices against radio interferences both from and towards the outside.
This machine is equipped with filters through which the machine is safe and in compliance with above regulations.
Tests were carried out according to EN 55011, EN 55014, EN 50082-1, IEC 1000-4-2, IEC 1000-4-4 regulations.

1.8 DESCRIPTION OF THE MACHINE (Fig. 1)

The belt sawing machine consists of two basic parts: the machine body **5** complete with motor and drive **7** which is integrated into lower part, consisting of the clamp **11**, the base **13** and swivel support **9**.
Here is a list of the main parts with the number indicating it in the drawing.
Legend **Fig. 1**

1 Command grip
2 Blade tension handwheel
4 Sliding blade guide
5 Machine body
6 Blade
7 Motor
8 Control box
9 Bar stop
10 Clamp (vice)
11 Morsa
12 Clamp drive
13 Base

WEIGHT = 18 Kg.
SIZE = cm 85 x 83 x H60 in maximum overall dimensions.
PACKAGING SIZE = cm 390 x 870 x H520

2 INSTALLATION

2.1 REMOVING THE PACKING

Remove the wooden frame which protects the machine during transit.
Try not to damage the frame as you may have to move the machine long distances or store it for long periods.

2.2 HANDLING (Fig. 2)

As the machine is not heavy **(Kg. 18)**, it can be lifted and moved by a single person by gripping it from the machine body **5**, duly clamped (see pint 2.3).

2.3 TRANSPORT (Fig.2)

It is necessary to low the saw body till the lower position and fix it to the base : it is sufficient to insert the pin **U** in the hole in the body, then lift the machine, gripping it as showed in **Fig.2**.
For transport the machine, it is better to place it in the box it was when purchased.
Ensure it is placed in the correct position indicated by the arrows on the packaging.
Pay careful attention to the ideogram printed on the box as they provide all necessary information for palletization and stacking of boxes.
Tying the load down with ropes or safety belts is raccomended during transportation to prevent the load from sliding or falling.

Packaging - Processing
Bid on Equipment
1-847-683-7720
www.bid-on-equipment.com

2.4 POSITION/WORK STATION (Fig.3)

Place the machine on a sufficiently flat workbench so that the machine has the better possible stability.
In respect of ergonomic criteria during cutting operations, the workbench must be positioned at such a height that the clamp level is between 90 and 95 cm from the ground **(see fig. 3)**.

ATTENTION: Make sure that the machine is placed in a working area with suitable environmental conditions and lighting. The general conditions of the working environment are of fundamental importance for accident prevention.

2.5 ELECTRICAL CONNECTIONS

Check that the mains to which the machine is connected is earthed in accordance with current safety regulations and that the power point is in good condition.
Remember that there should be a magnetothermic protective device fitted upstream of the mains to protect all the conductors from short circuits and overloads.
This protective device should be selected according to the electrical features of the machine listed below:

Nominal voltage ..... 230 Volt ~
Nominal frequency ..... 50/60 Hertz
Max programmed absorbed value ..... 5 Ampere
Nominal input power ..... 1200 Watt
Power factor 0,96
Nominal speed ..... 8.000-16.000 rpm
Insulation ..... Classe B
Type of service ..... intermittent S4-60 %

In case of power failure in mains, while you wait for power to be restored there is no danger hazard may arise: in fact, the electronic governor O is also equipped with a reset function which prevents the machine from restarting automatically.
The motor of your sawing machine is equipped with a protective heat circuit breaker which interrupts the power supply when the temperature of the coils rises too high.
When the power supply is interrupted, wait for normal reset.

3 ADJUSTING (Fig. 4-5-6-7-8)

3.1 TENSION OF THE BLADE (Fig.4)

ATTENTION: The machine is fitted with a blade-tightening device that limits tension automatically.

Turn handwheel **B** clockwise until the clutch engages

3.2 BAR STOP (Fig.5)

Use the bar stop supplied if you have to do several cuts on pieces of the same length.
In this way you do not have to repeat the same measurement each time.
Screw rod **E** into the hole of the base and fasten it with nut **F.** Slacken the handwheel **G** and place the stop **L** at the correct distance from the blade. Tighten handwheel **G** again.

3.3 CUTTING ANGLE (Fig.6)

The band saw can cut at an angle varying from 0 to 60 degrees: it is sufficient to slacken the handle **I** and turn the swiwel support **J** towards the respective limit stops **H** and **K**.
It is also possible to have a reference for the 45° quick-setting by turning the knob **S** upwards."
For all intermediate angles, turn the swiwel support **J** until the mark **M** on the support matches the corresponding position on the plate.
Then lock the rotating support **J** again.

3.4 CUTTING SPEED (Fig.7)

Your sawing machine is equipped with CESC (Constant Electronic Speed Control), which allows gradual and continuous variation of the cutting speed, adapting it to the type and dimension of the material to be cut (see CUTTING TABLE).
To select the most suitable speed, use the speed control knob **O** to increase or decrease the speed as you require.
Example:

Stainless Steel :	35 m/min.	position 1
Common Steel :	40÷60 m/min.	position 2-3
Allum.Alloy :	80 m/min.	position 4
Pipes/sections :	70÷80 m/min.	position 3-4

3.5 SLIDING BLADE GUIDE (Fig. 8)

The sliding blades guide **P** with integrated protection fitted on your sawing machine is used to perform the cut while guiding the necessary part of the blade and fully protecting the part not used in the cutting process.
Slacken the knobs **Q** and slide the blades guide **P** so as to move it closer to or further from the part to be cut, as shown in the figure.

ATTENTION: If this adjustment is not done, the part of the blade not used in the cutting process will be exposed and this will create an extra risk of contact, besides altering the quality of the cut.

Packaging - Processing
Bid on Equipment
1-847-683-7720
www.bid-on-equipment.com

EN

3.6 BEARINGS BLADE GUIDE (Fig.9)

The blade-guide on the outside of the sawing machine are eccentric and adjustable so as to simplify blade replacement and to keep it guided as its best.
They must always touch the blade slightly, so that they rotate when the blade passes, but must not be completly locked.
In order to approach or remove the eccentric blade-guide, gently turn the head of the screws **R** using a 10 mm. wrenches key.

4 USE

4.1 RUNNING IN THE BLADE

ATTENTION: If the correct running in procedure is not performed, the bladès cutting precision may be irreparably compromised.

To obtain the best performance, the bi-metal blades fitted on your sawing machine must be run in for a short period. For this reason the first two or three cuts should be done where possible on a solid piece Ø 40-50 mm, using a very slight pressure on the blade, and gradually increasing pressure in subsequent cuts.
To gauge the correct pressure in normal operating conditions defined by this manual (see cutting table), consider for example that the first cut on solid steel (eg. C40) Ø 50 mm should be done in about 4 minutes.
After running-in, the same piece may easily be cut in about 2 minutes. If the running-in process is done correctly, the finish and precision of the cut will be of better quality and the blade will last longer.

4.2 WORKING (Fig. 7)

Turn the main switch **D** to position **1** : in doing the switch comes on and the machine is ready for operation.

ATTENTION: Before starting any cutting operation, check that all the protections are complete and in the correct position.

Once you have completed all the procedures and operations described so far, you may start the working processes.
To perform the cut, move to the front of the machine and grip the handgrip with your right hand.

ATTENTION: Keep your left hand away from the cutting area and on no account try to reach it when cutting is in process.

Use your right-hand thumb to press the side release button **B (Fig. 7)**: as such you will disable the safety system that prevents any unintentional starts. Then use your right-hand forefinger to press start button A and lower the body gradually until the blade lightly touches the work piece to be cut.

Now begin to apply gradual pressure on the part and complete the cut.

ATTENTION: Always release button A **between one cutting operation and another, while you are positioning the part. do not try to block it or alter its functional characteristics in any way.**

If the machine suddenly stops after numerous consecutive cuts, do not be alarmed. The heat protector device of the motor has been activated, breaking the power supply when the temperature of the coils reaches the threshold limit defined by the insulation class, to prevent damage to the motor.
In this case, release the button A and wait for automatic reset which usually takes place after a few minutes.
Your sawing machine is equipped with an electronic speed governor which also includes a motor protection function obtained by means of an amperometric limiter. In this way it can not absorb an amount of current greater than the set one, expressed by the maximum value of absorption (see 2.5).
If the limiter trips while the machine is in operation, slightly decrease the cutting pressure in addition, this enables to safeguard the blade life and performance and to obtain always a sharp and clean cut.

4.3 REPLACING THE BLADE (Fig. 9)

CAUTION: When you perform this operation, always wear protective gloves to avoid contact with the teeth of the blade.

- check that the main switch **D (Fig. 7)** is at position **0**;
- slacken the handles **Q** and slide the blades guide **P** as far as it will go, following the direction on the arrow **(Fig. 8)**;
- remove the protective casing unscrewing the four screws;
- slacken the blade tension, turning the handwheel **B** in a anti-clockwise direction;
- extract the blade first from the guides and then from the rubber coated pulleys;
- insert the new blade first between the guides and then onto the rubber coated pulleys, **with the teeth facing as showed in (Fig. 9)**;
- put the blade under tension again as described in point 3.1.
- replace the protective casing;
- reposition the blade guides **P** in the correct position for the next cut.

ATTENTION: This machine has been developed for working with the blade rotating clockwise (Fig. 9).
It is absolutely necessary to check that the blade is produced according to this rotation mode.

Packaging - Processing
Bid on Equipment
1-847-683-7720
www.bid-on-equipment.com

4.4 CUTTING CAPACITY (Fig.10)

The table below specifies the cutting capacity at 0, 45 and 60 degrees which may be obtained in normal conditions of use described in this manual and without placing any other object between the jaws of the clamp.

SECTION	ANGLE	CUTTING
	0 gradi	102
		100 x 100
		90 x 120
	45 gradi	80
		80 x 80
		80 x 82
	60 gradi	50
		43 x 43
		43 x 50

4.5 CORRECT POSITIONING OF THE PIECE IN THE CLAMP (Fig. 11)

The pieces to be cut should be fitted directly between the jaws without adding other objects.

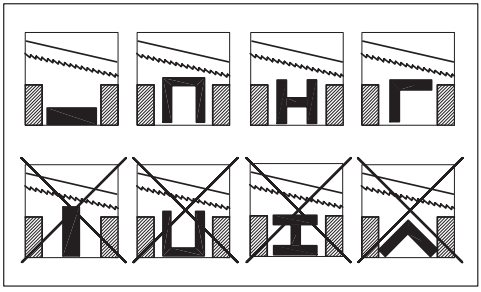

ATTENTION: Never hold the pieces to be cut in your hand.

When the pieces to be cut are profiled sections, flat pieces or special shapes, refer to the examples shown in the figures.
If the thickness of the profiled section is to be very thin, an outline should be fitted which copies the profile inside the profiled section itself to stop it being crushed between the jaws.

4.6 CUTTING TABLE

"S mm.	Z x 1"	Mt/min.	Nr.
>50	4/6	40	2
<50	6/10	50	3

S mm.	Z x 1"	Mt/min.	Nr.
<5	14	70	5
>5<20	6/10	60	4
>20	4/6	50	3
INOX		30	1
ALU ●		60	5
ALU ○		80	6

5 ACCESSORIES

5.1 CHOISE OF BLADE

Your sawing machine is equipped with a bi-metal blade measuring 1440x13x0.65 mm with variable toothing 8/12 teeth per inch, for use in the majority of cuts possible with this machine.
For special requirements (see cutting table point 4.6), for example, for cutting large solid sections or profiled sections or corner pieces of small thickness, there are also blades avail-able with 6, 14 or 18 teeth per inch.

MATERIAL: M42 (acciaio per molle + acciaio HSS)
EXTENSION : mm 1440
HEIGHT: mm 13
THICKNESS: mm 0,65
TOOTHING: standard 8/12 optional 6-14-18

6 MAINTENANCE

6.1 REGULAR MAINTENANCE

The operations of ordinary maintenance, which may also be performed by non-specialist personnel, are all described in the previous sections and here below.

1. Before performing any maintenance operation, disconnect the machine electric plug from the wall outlet.
2. During maintenance operations, always wear personal protection (safety goggles and gloves).
3. Remove the processing residues from the cutting area and the blade guides whenever necessary. You are advised to use a suction device or a brush.

ATTENTION: Do not use jets of compressed air.

4. If you do not intend to use the sawing machine for a long time, clean it and put it in a dry place if possible. In these cases it is advisable to slacken off the blade so that it is not kept tight for no reason.

Packaging - Processing
Bid on Equipment
1-847-683-7720
www.bid-on-equipment.com

EN

EN

6.2 ASSISTENCE

Should it be necessary to call qualified personnel for operations of extraordinary maintenance, or in the case of repairs, under guarantee or at a later date, you should always contact an authorized service centre or the factory directly, if there is no service centre in your area.

6.3 DISPOSAL OF THE MACHINE, PACKING

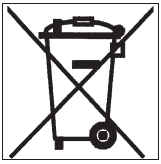

2002/96/EC

At the end of the machine life, if the machine must be scraped, contact an authorised waste disposal centre in order to comply with the Standards for hygiene and environment safeguard.
The packing must be disposed of according to the ruling standards by delivering it to authorised people for the collection, disposal or reclaim.
Please contact the ASSOCIATION OF USED OILS near to you.

7 TROUBLESHOOTING

PROBLEMS	PROBLEMS CAUSES	SOLUTIONS SUGGESTED
The motor does not work.	Defective motor, power cable or plug.	Specialized personnel should check the machine; do not attempt to repair the motor by yourself.
	Blown electric panel fuses.	Check fuse integrity and replace, if necessary.
	No voltage in the mains system.	Check for voltage in the mains system.
	The overload cutout has tripped.	Release the run button and wait a few minutes for the overload cutout to reset.
Overload cutout tripped.	Motor overheating.	Check that motor air intakes are clear.
	Motor overload caused by excessive cutting pressure.	Perform the cut on the piece at the correct pressure.
	Motor breakdown.	Specialized personnel should check the machine; do not attempt to repair the machine by yourself.
Inaccurate cutting angle at 90° - 45° - 60°.	The setting of the H and K retainers (point 3.3) is inaccurate.	Set the retainers by unloosening the fastening screws and re-positioning them.
Inaccurate cut squaring.	Excessive cutting pressure (on pipes and section bars).	Decrease cutting pressure.
	Incorrect blade toothing in relation to the piece to cut. Incorrect adjustment of the eccentric and sliding blade-guides.	Check the cutting parameters (blade toothing, cutting speed) in the cuts table (point 4.6).
	Incorrect cutting speed in relation to the piece to cut.	Check blade-guide adjustment (points 3.5 and 3.6).
	The piece is wrongly positioned in the vice.	Check piece positioning and clamping in the vice (point 4.5).
Cut finish is coarse or corrugated.	The blade is worn or its toothing is not right for the thickness of the piece being cut.	Check the cutting parameters (blade toothing, cutting speed) in the cuts table (point 4.6).
	Excessive cutting pressure.	Decrease cutting pressure.
The blade tends to protrude from the guides.	Incorrect eccentric blade-guide adjustment.	Check eccentric blade-guide adjustment (point 3.6).
	Excessive wear of the pulley rubber linings.	Specialized personnel should check the pulleys and replace them if necessary.
	The blade slips on the pulleys, caused by oil or grease required for cutting operations.	Never use any type of lubricant or coolant for the cutting operations; specialized personnel should check and, if necessary, replace the pulleys.

Packaging - Processing
Bid on Equipment
1-847-683-7720
www.bid-on-equipment.com

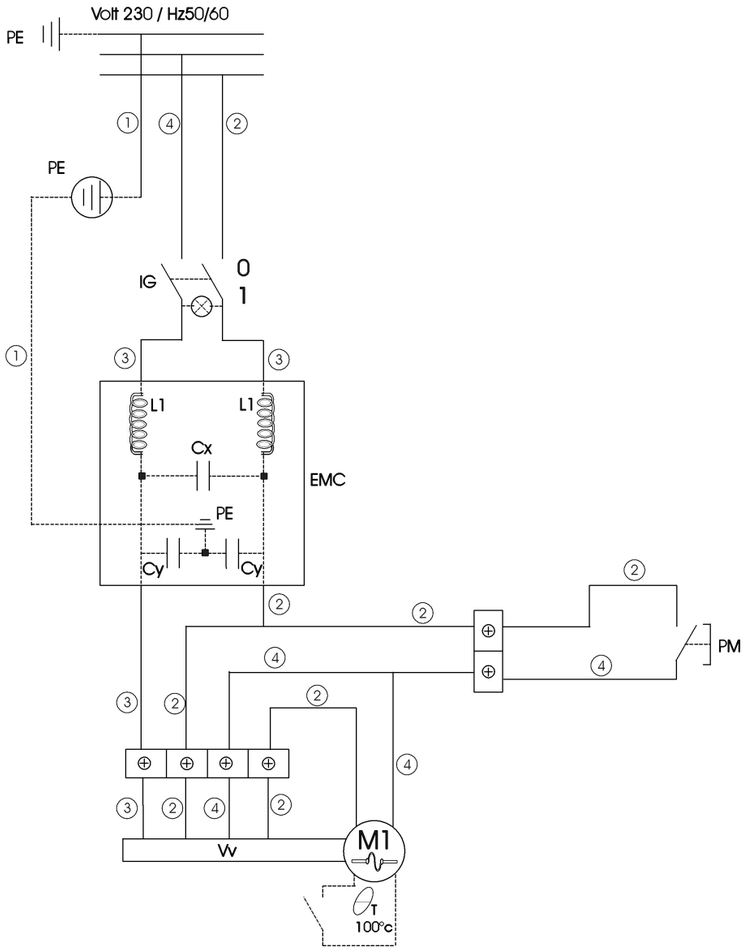

	ITALIANO	ENGLISH	DEUTSCH
PE	Circuito di protezione	Protection circuit	Erdung
IG	Interruttore generale luminoso	Main switch	Hauptschalter
PM	Pulsante di marcia	Run button	Handschalter
T	Disgiuntore termico di protezione	Thermal cut-off	Hitzeschutzzunterbrecher
EMC	Filtro antidisturbo	Radio interference suppressor	Entstorer
L1	Induttanze 2x1 mH	Inductance 2x1 mH	Induktiv 2x1 mH
Cx	Condensatore 0,1 mF	Condensator 0,1 mF	Kondensator 0,1 mF
C y	Condensatore 2z2500 pF	Condensator 2z2500 pF	Kondensator 2z2500 pF
Vv	Vanatore di velocità	Cutting speed adjustment	Geschwindigkeitsvariator
M1	Motore V 230 Hz 50/60 850 Watt	Motor V 230 Hz 50/60 850 Watt	Motor V 230 Hz 50/60 850 Watt
1	G/V	Y/G	G/G
2	Rosso	Red	Rot
3	Nero	Black	Schwarz
4	Blu	Blue	Blau
5	Marrone	Brown	Braun

	FRANCAIS	ESPANOL	PORTUGUÊS
PE	Circuit de protection	Circuito de protecciòn	Circuito de protecao
IG	Interrupteur général	Interrupteurgeneral	Interruptor general
PM	Bouton de marche	Pulsador de marcha	Botao de arranque
T	Disjoncteur thermique de protection	Disyuntar de protecciòn	Disjuntor térmico de proteccao
EMC	Filtre anti-brouillages	Filtro antiperturbaciones	Filtro anti-interferencia
L1	Inductance 2x1 mH	Inductancia 2x1 mH	Indutancia 2x1 mH
Cx	Condensateur 0,1 mF	Condensador 0,1 mF	Condensador 0,1 mF
C y	Condensateur 2z2500 pF	Condensador 2z2500 pF	Condensador 2z2500 pF
Vv	Variateur de vitesse	Variador de velocidad	Reostato de velocidade
M	Moteur V 230 Hz 50/60 850 Watt	MotorV 230 Hz 50/60 850Watt	Motor V 230 Hz 50/60 850 Watt
1	J/V	A/V	A/V
2	Rouge	Rojo	Vermelino
3	Noir	Negro	Preto
4	Bleu	Azul	Azul
5	Marron	Marron	Castanho

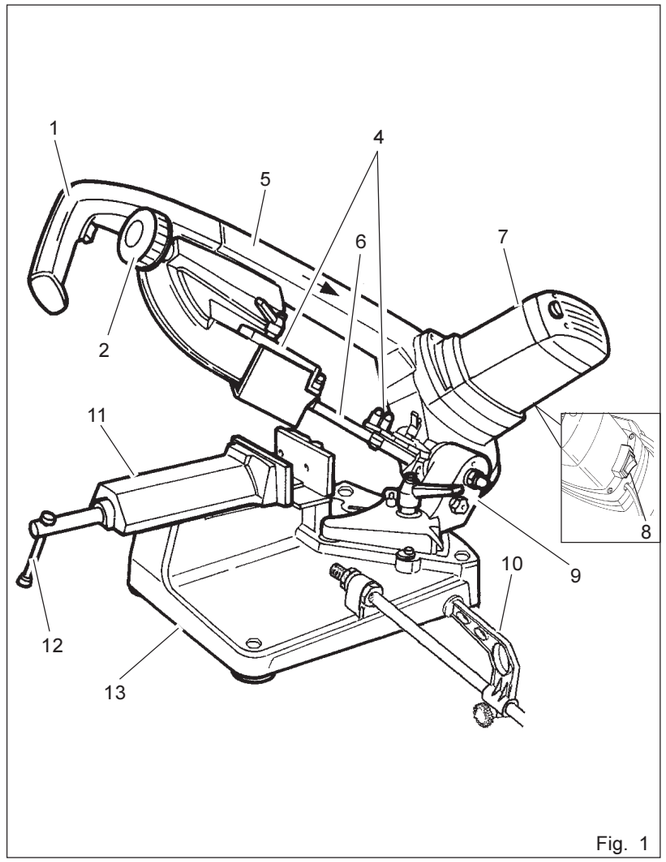

Fig. 1

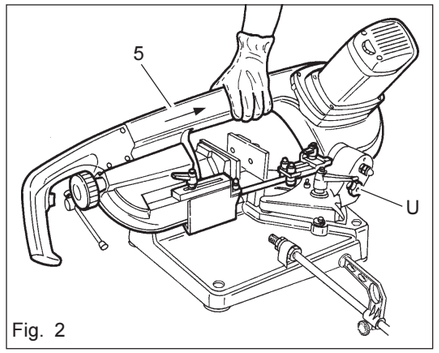

Fig. 2

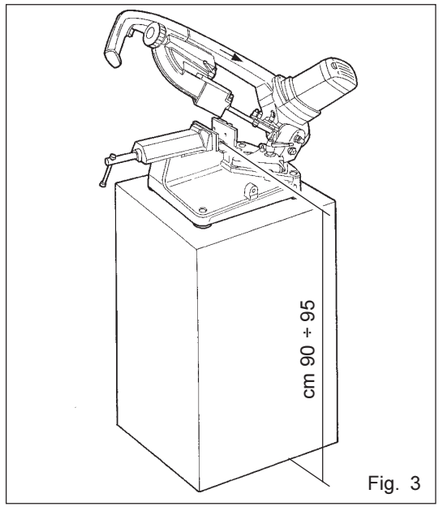

Fig. 3

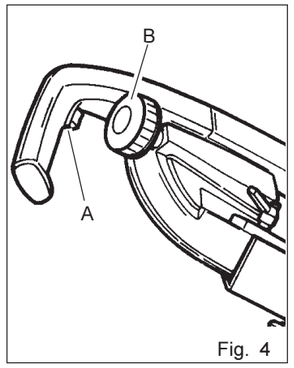

Fig. 4

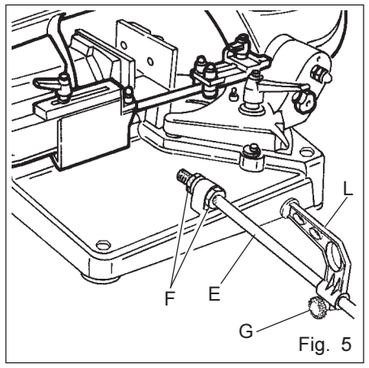

Fig. 5

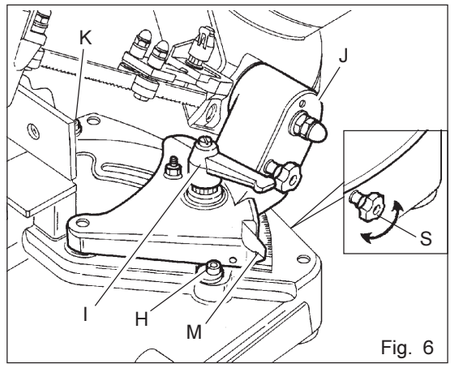

Fig. 6

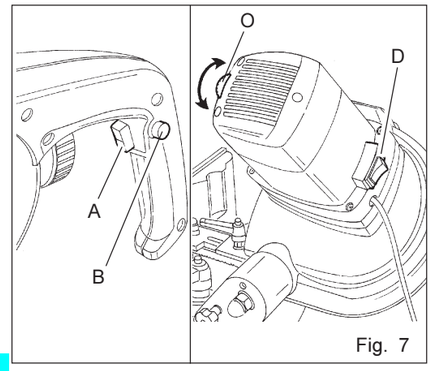

Fig. 7

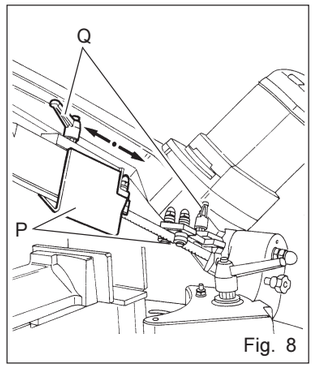

Fig. 8

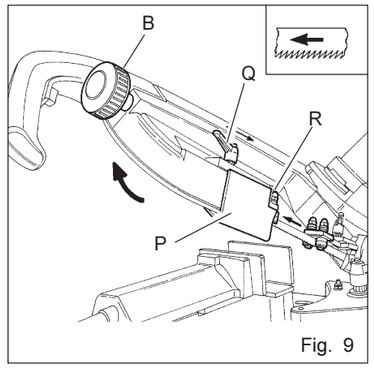

Fig. 9

Packaging - Processing
Bid on Equipment
1-847-683-7720
www.bid-on-equipment.com

NR. 1

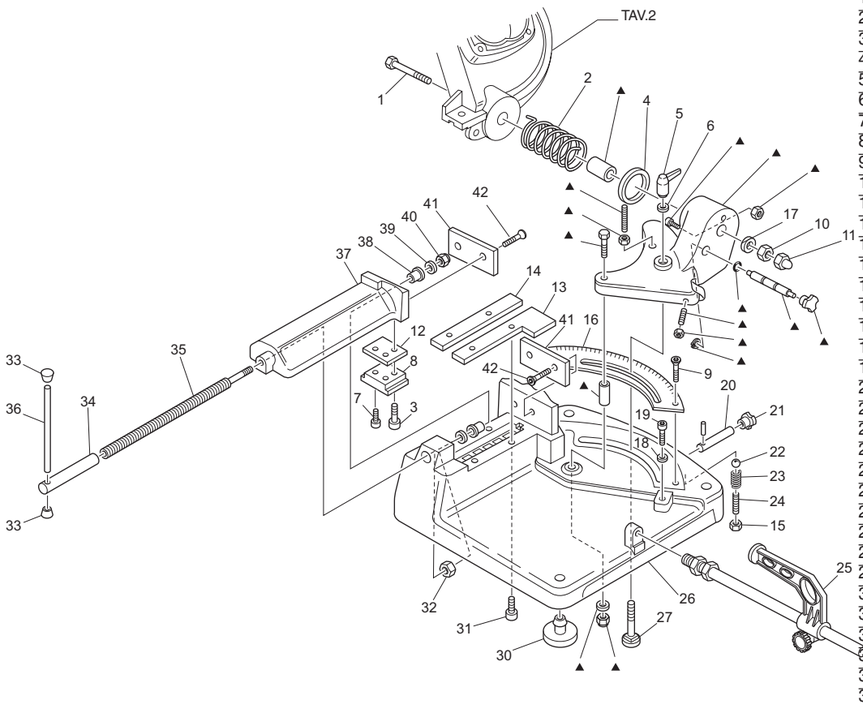

POS.	COD./KOD.	NOTE / MERKE / NOTES / NOTA / NOTAS
1	5.10.00.76	
2	5.08.01.16	
3	UNI 5931 M5 x 45	
4	0.15.51.43	
5	0.14.70.02	
6	0.12.07.10	
7	UNI 5931 M5 x 20	
8	5.13.04.28	
9	DIN 7500 M5x15	
10	UNI 5589 M10 x 1,5	
11	UNI 5721 M10	
12	5.13.04.16	
13	5.13.04.26	
14	5.13.08.15	
15	UNI 5588 M6	
16	5.18.17.22	
17	0.12.07.10	
18	5.12.40.29	
19	DIN 7500 M6 x 10	
20	5.17.10.47	
21	0.14.00.85	
22	0.17.00.04	
23	5.08.10.25	
24	UNI 5923 M6 x 14	
25	7.13.05.52	
26	5.04.35.60	
27	UNI 5732 M10 x 60	
28		
29		
30	5.13.77.93	
31	UNI 5931 M6 x 20	
32	UNI 5588 M16	
33	5.15.00.05	
34	5.06.30.34	
35	5.10.03.21	
36	5.14.20.14	
37	5.04.27.54	
38	0.06.30.41	
39	0.15.51.50	
40	UNI 7474 M8	
41	5.15.25.97	
42	UNI 5933 M6 x 10	
43		

NR. 2

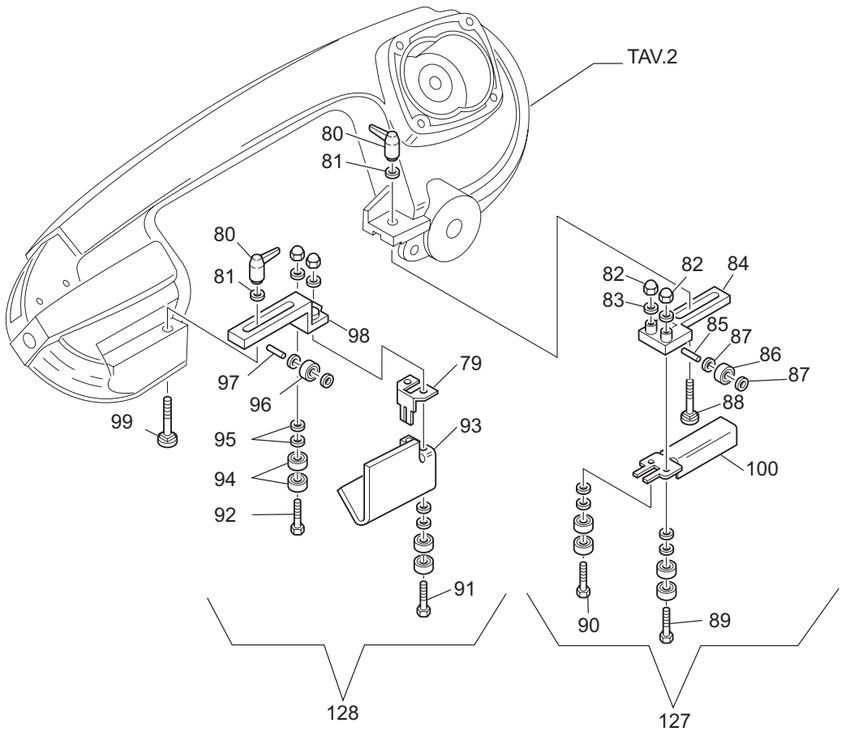

POS.	COD./KOD.	NOTE / MERKE / NOTES / NOTA / NOTAS
44	0.59.60.02	
45	5.10.05.07	
46	0.08.02.56	
47	DIN 7500 M4 x 8	
48	5.05.01.29	
49	UNI 6954 P8 x 25	
50	5.13.07.34	
51	5.00.15.72	
52	5.13.79.14	
53	0.15.51.52	
54	5.05.01.28	
55	DIN 7500 M5 x 10	
56	0.80.23.24	
57	5.18.17.27	
58	5.04.27.52	
59	DIN 7500 M4x 15	
60	5.15.41.03	
61	5.12.40.64	
62		
63		
64	7.21.42.12	
65	5.12.40.65	
66	0.60.62.05	
67	5.12.40.66	
68	UNI 5933 M6 x 15	
69	3.27.73.48	
70	5.18.17.28	
71	0.17.99.01	
72	5.21.42.25	

NR. 3

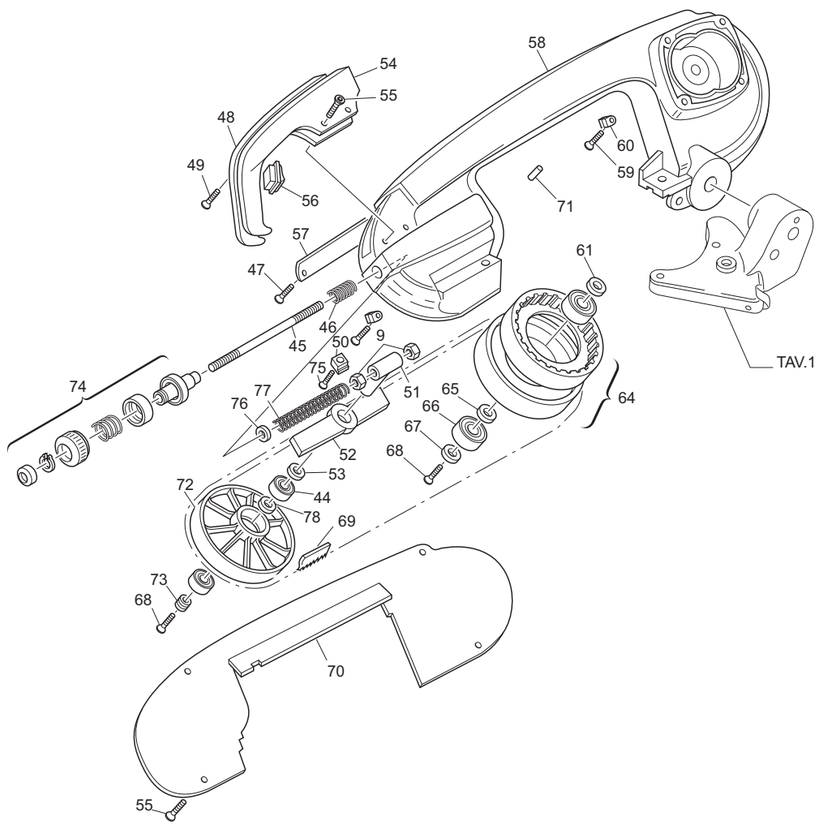

POS.	COD./KOD.	NOTE / MERKE / NOTES / NOTA / NOTAS
73	5.12.40.62	
74	7.13.05.89	
75	DIN 7500 M5 x 20	
76	0.12.40.26	
77	5.08.10.05	
78	5.12.06.63	
79	5.18.17.38	
80	0.14.70.00	
81	0.12.07.06	
82	UNI 5721 M6	
83	UNI 1751 Ø 6	
84	5.13.07.74	
85	0.17.40.16	
86	0.59.06.34	
87	0.12.90.04	
88	UNI 5732 M6 x 20	
89	5.10.00.75	
90	5.10.00.74	
91	5.10.00.65	
92	5.10.00.64	
93	5.18.16.22	
94	0.60.06.07	
95	5.12.06.38	
96	0.59.06.24	
97	0.17.40.22	
98	5.13.07.32	
99	UNI 5732 M6 x 30	
100	5.18.17.29	
101	5.15.45.01	
102	5.87.08.43	
103	DIN 7500 M4 x 25	
104	5.85.00.08	
105	7.01.31.42	
106	0.81.60.08	
107	0.81.60.04	
108	5.85.01.11	
109	7.82.01.12	
110	5.18.28.57	
111	UNI 6954 P6 x 25	
112	UNI 6954 P7 x 16	
113	0.80.23.16	
114	7.21.30.16	
115	5.18.25.42	
116	UNI 5931 M5x25	
117	0.60.06.08	
118	5.18.20.06	
119	5.06.30.40	
120	UNI 5931 M5x18	
121	0.60.60.01	
122		
123	5.02.41.15	
124	5.85.01.12	
125	5.06.10.38	
126	7.80.18.17	
127	7.13.25.03	
128	7.13.25.02	
129	5.18.28.56	
130	0.32.05.25	
▲	7.13.36.22	

NR. 4

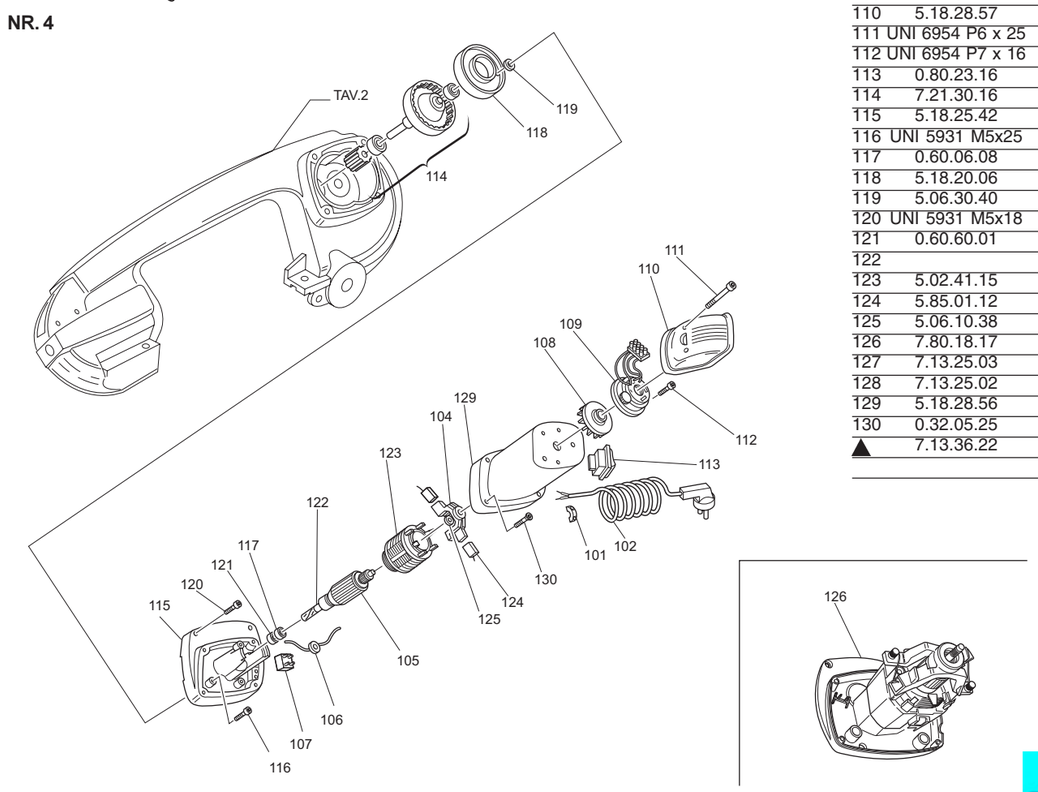

Packaging - Processing
Bid on Equipment
1-847-683-7720
www.bid-on-equipment.com